Snap–In Nylon Rocker

Features
- **Double Pole Types**
- **Double Insulated**

S22

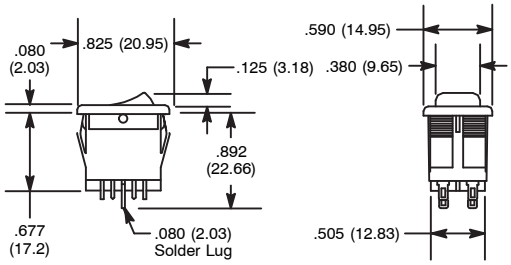

Terminal Types
a: .080" Solder Lug

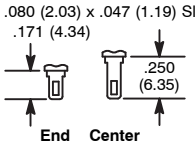

Mounting Hole

Table 1.

Panel Thickness	Y
.030 (.762) – .060 (1.52)	.756 (19.20
.060 (1.52) – .093 (2.36)	.764 (19.40)
.093 (2.36) – .156 (3.96)	.780 (19.81)

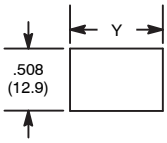

NTE Type No.	Circuitry	Action			Actuator		Diag No.
					Material	Color	
54–073	DPDT	ON	NONE	ON	Nylon	Black	S22a
54–078	DPDT	ON	NONE	(ON)	Nylon	Black	S22a
54–079	DPDT	ON	OFF	ON	Nylon	Black	S22a

SPECIAL NOTE: ( ) = Momentary Function

Specifications

Current Rating: 8A 125VAC, 4A 250VAC
Insulation Resistance: 100 Megohms (min.)
Dielectric Strength: 1000V RMS (min.)
Temperature Rating: +32° to +185°F (0° to +85°C)
Electrical Life: 50,000 cycles
Mechanical Life: 100,000 cycles
Terminal Type: .080" Solder Lug
Mounting Hole: See Table 1

Sealed Automotive/Marine Nylon Snap–In Rocker

Features
- **Illuminated Types Available on Page 36**
- **IP66/IP68 Certified**
- **UL1500 Recognized – Ignition Protection for Marine Use**
- **Sealed for Auto/Marine applications**
- **Salt Spray Resistant**
- **Able to Withstand –40° to +85°C Temperature**

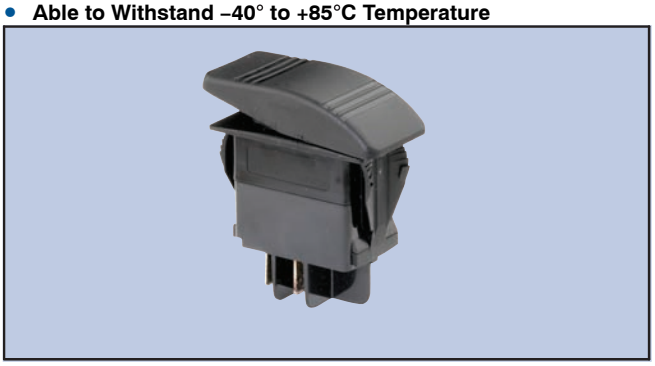

S17

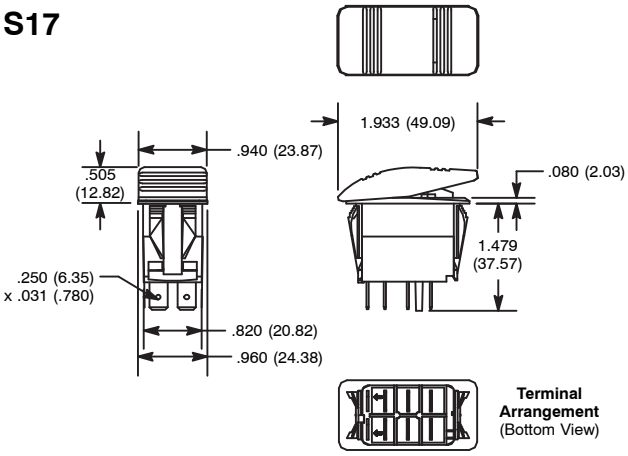

	NTE Type No.	Circuitry	Action			Actuator	Diag No.
	54–044	SPST	ON	NONE	OFF	Thermoplastic polycarbonate with a hard Nylon 66 thermoplastic surface overlay	S17
	54–045	DPDT	ON	NONE	ON		S17
	54–046	DPDT	ON	OFF	ON		S17
NEW	54–639	DPDT	(ON)	OFF	(ON)		S17

SPECIAL NOTE: ( ) = Momentary Function

Specifications

Current Rating: 20A 12VDC
Insulation Resistance: 50 Megohms (min.)
Dielectric Strength: 1500V RMS (min.)
Temperature Rating: –40° to +185°F (–40° to +85°C)
Electrical Life: 50,000 to 100,000 cycles circuit dependent
Mechanical Life: 150,000 cycles
Terminal Type: .250" Tab Q.C.
Mounting Hole: 1.450 (36.83) x .830 (21.08)