FunctionMAX

High-speed transmission 0.5mm pitch Board-to-Board connection floating connectors

FX23/FX23L Series

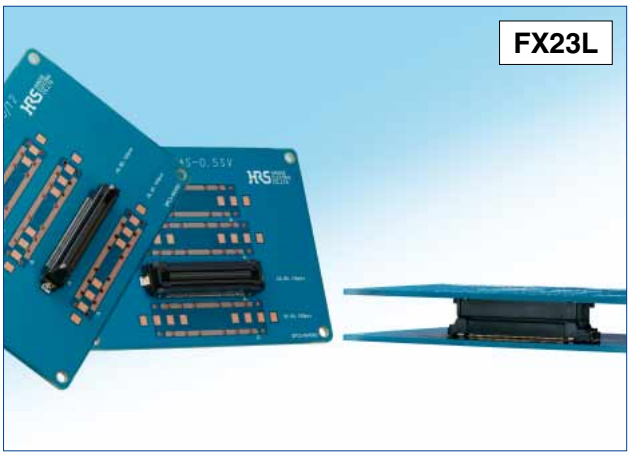

■Features

1. **0.5mm pitch**
2. **Stacking (Height : 8 - 30mm)/vertical**
3. **Contacts available : 20/40/60/80/100/120 for signal + 4 for power source**
4. **Floating movable amount : X direction : ±0.6mm ; Y direction: ±0.6mm**
   A floating movement above the connector pitch is possible. (Fig.1)
5. **High-speed transmission (8+ Gbps)**
6. **Hybrid power design (3A/pin×4 lines)**
   The guide posts on both sides of the connector are equipped with 4 lines of power contacts in addition to the signal contact. (Fig.2)
7. **Current capacity : Signal contact 0.5A/pin, power contact 3A/pin**
8. **Available for automatic mounting (absorption tape is attached as standard equipment)**
9. **Excellent mating performance due to the large guide post.**

Floating ability : XY-axis±0.6mm

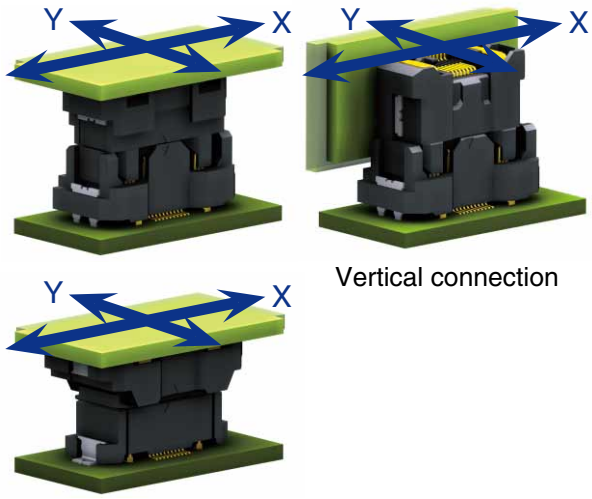

Fig.1

Hybrid Power/Signal contacts

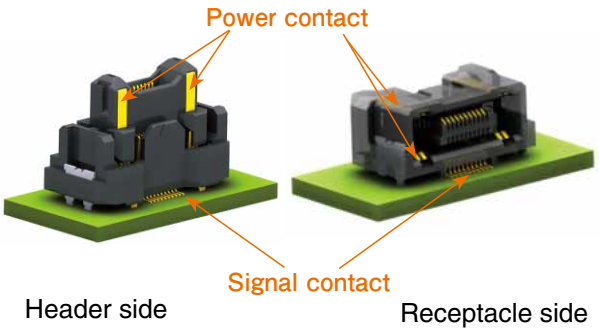

Fig.2

■Signal integrity

● **ICR (Insertion-loss-to-Crosstalk-Ratio)**
The ICR containing cross-talk from 5 adjacent differential pairs provides adequate margin in comparison with the criteria based on the specification of IEEE802.3ap.

● **Differential impedance**
Differential impedance is 100±10Ω at the rise time of 87.5ps (20 to 80%).

Jan.1.2022 Copyright 2022 HIROSE ELECTRIC CO., LTD. All Rights Reserved.

■Product Specifications

Ratings	Rated current : Signal part 0.5A Power part 3.0A	Operating temperature range : -55 to 105℃ (Note 1) Storage temperature range : -10 to 60℃ (Note 2)
	Rated voltage : Signal part AC 50V Power part AC 200V	Operating/storage humidity range : 90% or less relative humidity (No dew condensation is allowed)

Items	Specifications	Conditions
1. Contact resistance	Signal part 70mΩ or less Power part 20mΩ or less	Measured at 100mA
2. Insulation resistance	Signal part 100MΩ or more Power part 1,000MΩ or more	Signal part Measured at DC Signal Measured at DC 100V Power Measured at DC 250V
3. Withstanding Voltage	No flashover or breakdown.	Signal contacts Energized at AC 150V for 1 minute Power contacts Energized at AC 600V for 1 minute
4. Mating durability	Contact resistance of the signal part 80mΩ or less Power part 30mΩ or less.	100 times insertion/withdrawal
5. Vibration proof	No electric outage of 1μ or greater.	Frequency 10 - 55Hz, half amplitude 0.75mm, 10 cycles in each of the 3-axis directions each for 5 minutes per cycle
6. Shock resistance	No electric outage of 1μ or greater.	Acceleration of 490m/s^2 ; duration 11ms, sine half-wave, 3 cycles in each of the 3 axes each in both directions.
7. Moisture resistance	Contact resistance of the signal part 80mΩ or less Power part 30mΩ or less Insulation resistance at the signal part 100MΩ or more Power part 1,000MΩ or more.	Left to stand for 96 hours at the temperature of 40℃ and the humidity of 90 to 95%
8. Temperature cycle	Contact resistance of the signal part 80mΩ or less Power part 30mΩ or less Insulation resistance at the signal part 100MΩ or more Power part 1,000MΩ or more.	Temperature -55 → 85℃ 5 cycles for a series of time periods : 30 minutes → 30 minutes

Note 1 : Includes temperature rise caused by current flow.
Note 2 : The term “storage” refers to the long-term storage condition of unused products before mounting on PCB.

■Materials / Finish

Part	Materials		Finish	UL standard
Insulator (FX23)	Header	Polyamide resin	Black color	UL94V-0
	Receptacle	LCP resin		
Insulator (FX23L)	Header	Polyamide resin	Black color	UL94V-0
	Receptacle			
Contact	Header	Copper alloy	Contacted part : gold plating Signal contact-mounting part : gold plating Power contact-mounting part : pure tin plating	—
	Receptacle			
Reinforcement metal fitting	Brass		Pure tin plated	—

Jan.1.2022 Copyright 2022 HIROSE ELECTRIC CO., LTD. All Rights Reserved.

■Product Number Structure

Refer to the chart below when determining the product specifications from the product number.
Please select from the product numbers listed in this catalog when placing orders.

●Straight header

FX23 - 120 P - 0.5 SV 15
❶ ❷ ❸ ❹ ❺ ❻

●Straight receptacle

FX23 - 120 S - 0.5 SV 10
❶ ❷ ❸ ❹ ❺ ❻

●Right angle receptacle

FX23 - 120 S - 0.5 SH
❶ ❷ ❸ ❹ ❺

❶Series name		: FX23
❷Number of contacts		
❸Connector type	P S	: Header type : Receptacle type
❹Contact pitch		: 0.5mm
❺Product type	SV SH	: Vertical : Right angle type
❻Product height type	Mating height [mm] = Numerical value on the header side + Numerical value on the receptacle side	

●Straight header

FX23L - 120 P - 0.5 SV 8
❶ ❷ ❸ ❹ ❺ ❻

●Straight receptacle

FX23L - 120 S - 0.5 SV 10
❶ ❷ ❸ ❹ ❺ ❻

❶Series name		: FX23L
❷Number of contacts		
❸Connector type	P S	: Header type : Receptacle type
❹Contact pitch		: 0.5mm
❺Product type	SV	: Vertical
❻Product height type	Mating height [mm] = Numerical value on the header side	

◆High-speed transmission property (FX23 : h=15mm, FX23L : h=12mm)

●Pin assignment

The following pin arrangement is recommended to match the 100Ω differential impedance and to contain cross-talk.

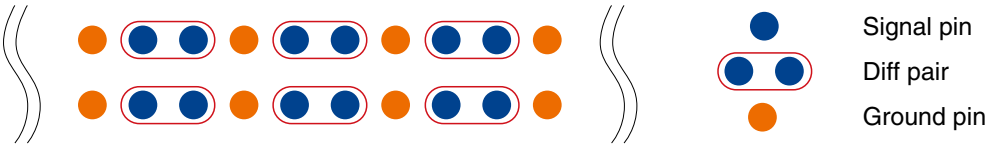

●Differential impedance 80ps rise time (20 to 80%)

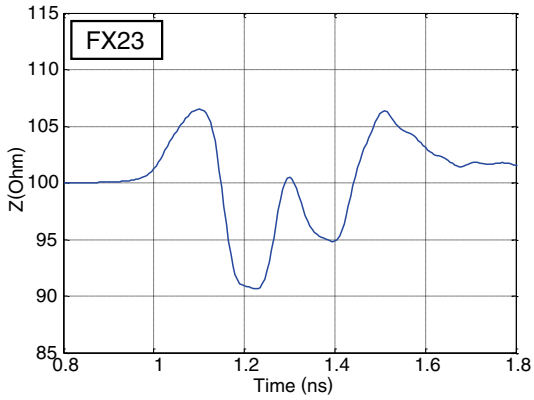

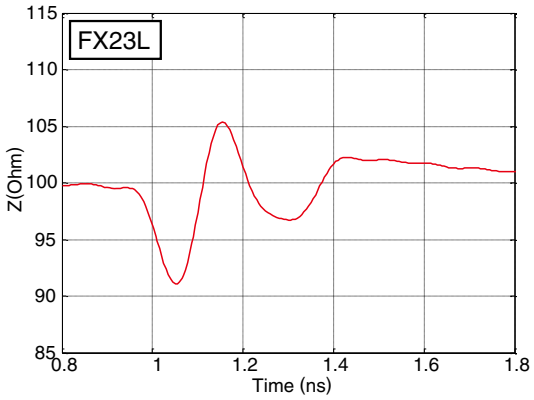

Meets the criterion of 100±10Ω at the rise time of 80ps (20 to 80%).

Jan.1.2022 Copyright 2022 HIROSE ELECTRIC CO., LTD. All Rights Reserved.

●Insertion loss

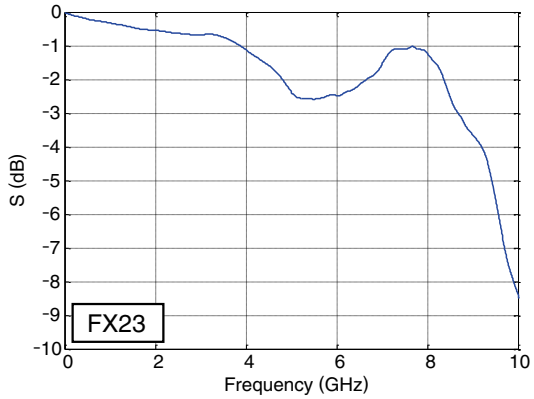

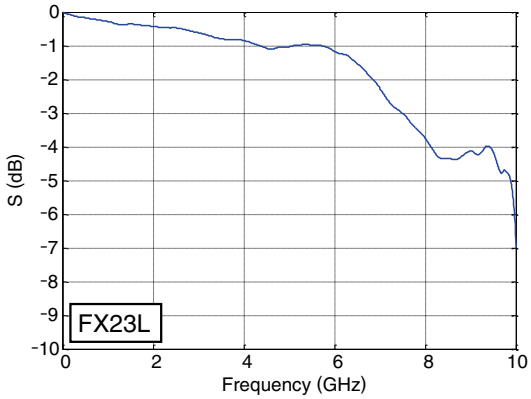

●Return loss

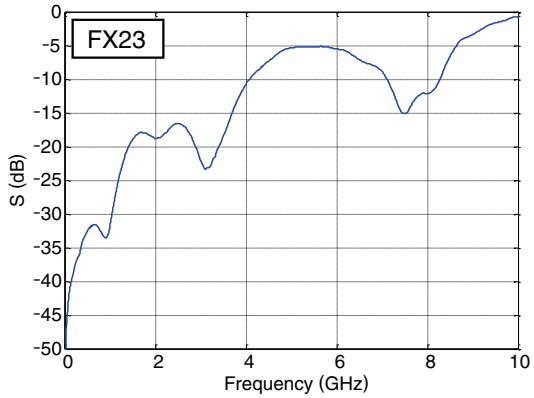

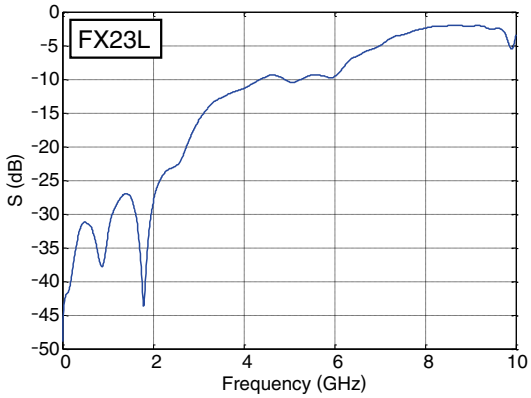

Passes insertion loss, return loss up to 5GHz.

●Near end cross-talk (NEXT)

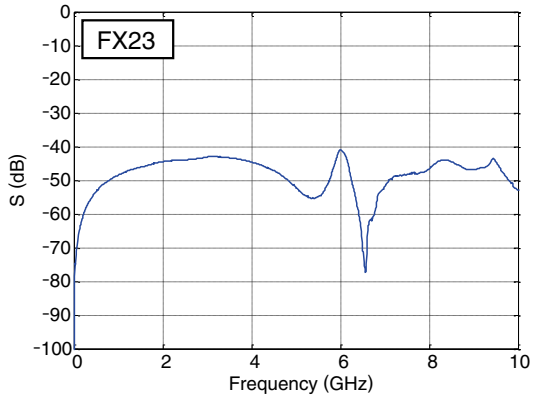

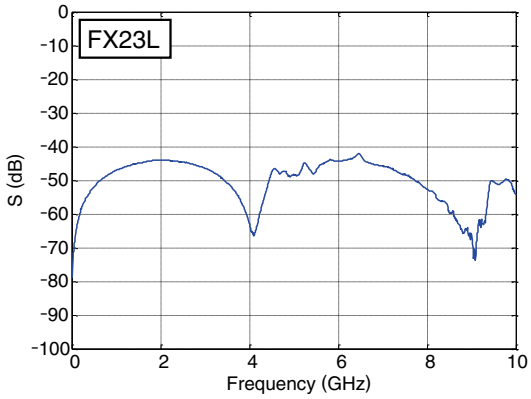

●Far end cross-talk (FEXT)

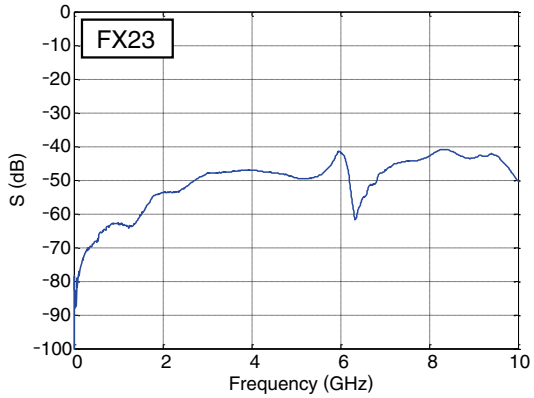

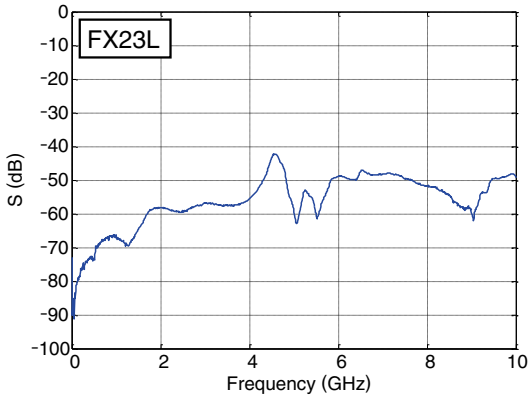

Low cross-talk up to 10GHz.

Jan.1.2022 Copyright 2022 HIROSE ELECTRIC CO., LTD. All Rights Reserved.

●Insertion loss/cross-talk ratio (ICR) for FEXT

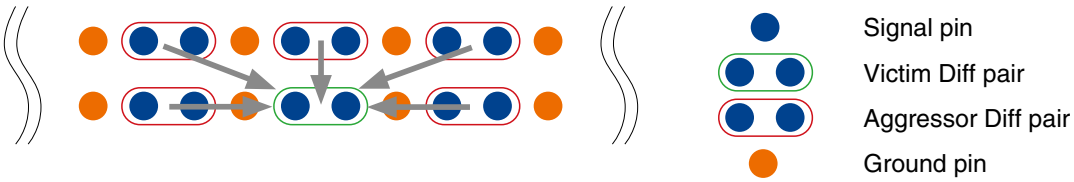

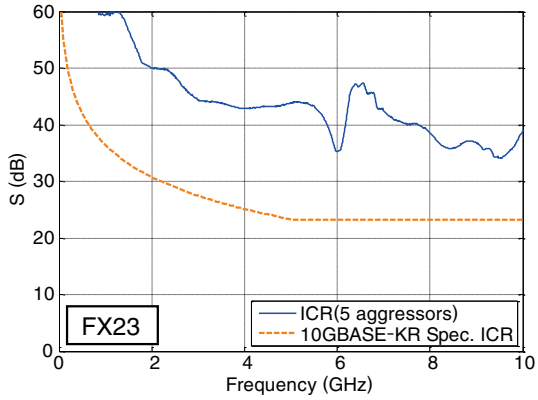

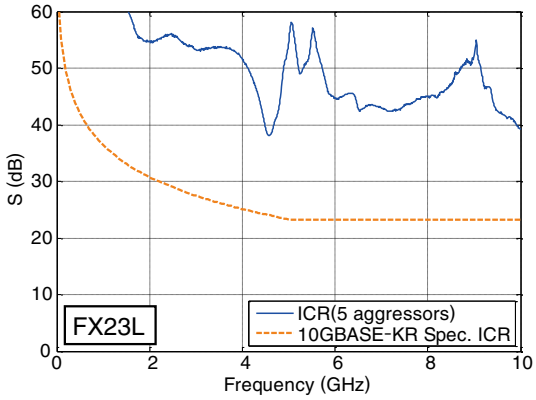

Insertion loss/cross-talk ratio (ICR) for FEXT using 5 sets of Aggressors has an adequate margin according to the specification of IEEE802.3ap.

■List of connection variations (vertical connection)

Right angle receptacle

FX23-∗∗S-0.5SH

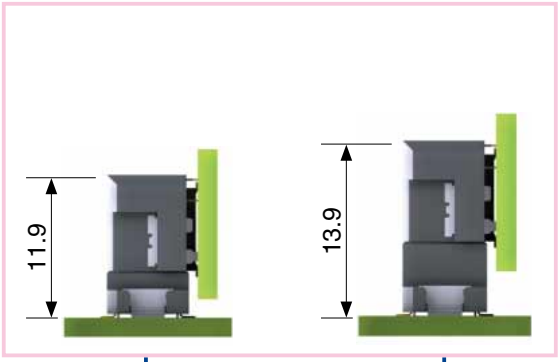

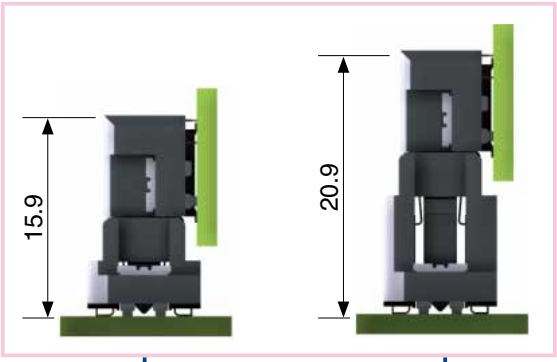

Rigid combination

FX23L-∗∗P-0.5SV10 FX23L-∗∗P-0.5SV12

Floating combination

FX23-∗∗P-0.5SV15 FX23-∗∗P-0.5SV20

Vertical header

∗∗⇒Number of contacts : 20、40、60、80、100、120

Note : FX23L-∗∗P-0.5SV8 and FX23-∗∗S-0.5SH can not engage since the metal hold down interferes each other.

Jan.1.2022 Copyright 2022 HIROSE ELECTRIC CO., LTD. All Rights Reserved.

■List of connection variations (Parallel connection)

●Height variation

FX23L-**P-0.5SV8
Rigid Type

FX23L-**P-0.5SV10
Rigid Type

FX23L-**P-0.5SV12
Rigid Type

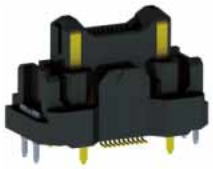
FX23-**P-0.5SV15
Floating Type

FX23-**P-0.5SV20
Floating Type

FX23L-**S-0.5SV
Floating Type

FX23L series
Standard Type
Floating range :
XY direction ±0.6mm

8mm

10mm

12mm

FX23×FX23L series
Double Floating Type
Floating range :
XY direction ±1.2mm

14mm

19mm

FX23-**S-0.5SV
Rigid Type

FX23×FX23L series
Rigid Type
⚠ No floating ability

9mm

11mm

13mm

FX23-**S-0.5SV10
Rigid Type

19mm

21mm

23mm

FX23 series
Standard Type
Floating range :
XY direction ±0.6mm

15mm

20mm

25mm

30mm

Jan.1.2022 Copyright 2022 HIROSE ELECTRIC CO., LTD. All Rights Reserved.

■Product dimensions FX23 series

●Vertical header

［FX23-∗∗P-0.5SV15］

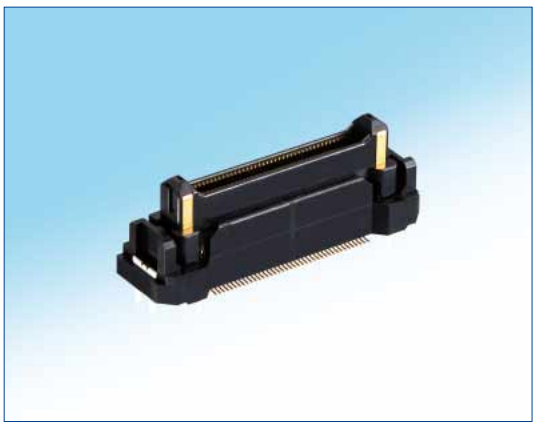

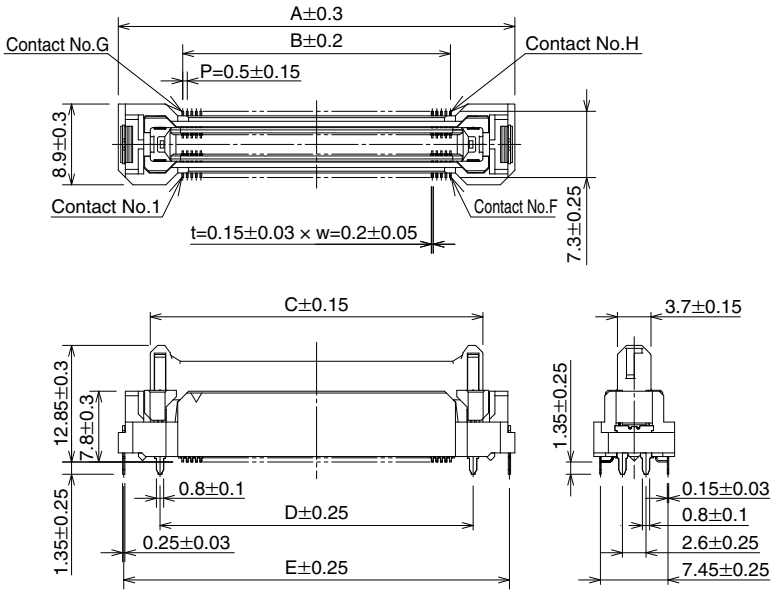

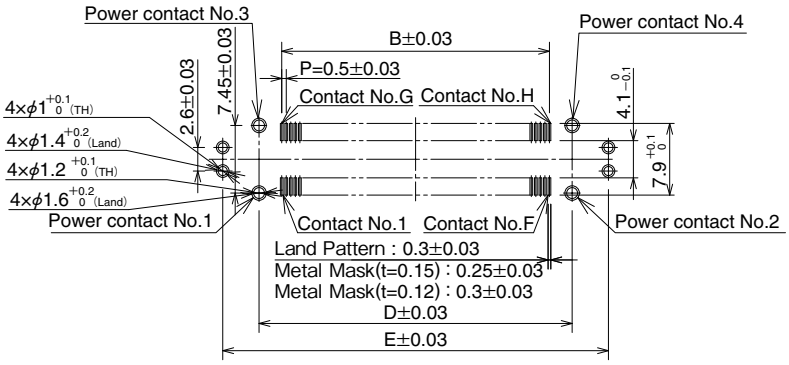

Unit : mm

Part No.	HRS No.	No. of contacts	A	B	C	D	E	F	G	H
FX23-20P-0.5SV15	573-3001-0 00	20	18.7	4.5	11.65	9.5	17.5	10	11	20
FX23-40P-0.5SV15	573-3002-3 00	40	23.7	9.5	16.65	14.5	22.5	20	21	40
FX23-60P-0.5SV15	573-3003-6 00	60	28.7	14.5	21.65	19.5	27.5	30	31	60
FX23-80P-0.5SV15	573-3004-9 00	80	33.7	19.5	26.65	24.5	32.5	40	41	80
FX23-100P-0.5SV15	573-3005-1 00	100	38.7	24.5	31.65	29.5	37.5	50	51	100
FX23-120P-0.5SV15	573-3006-4 00	120	43.7	29.5	36.65	34.5	42.5	60	61	120

Jan.1.2022 Copyright 2022 HIROSE ELECTRIC CO., LTD. All Rights Reserved.

[FX23-**P-0.5SV20]

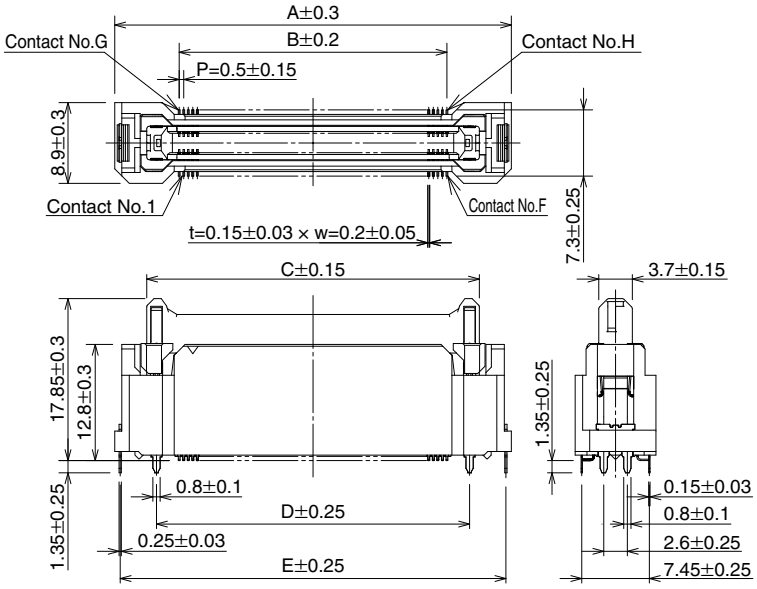

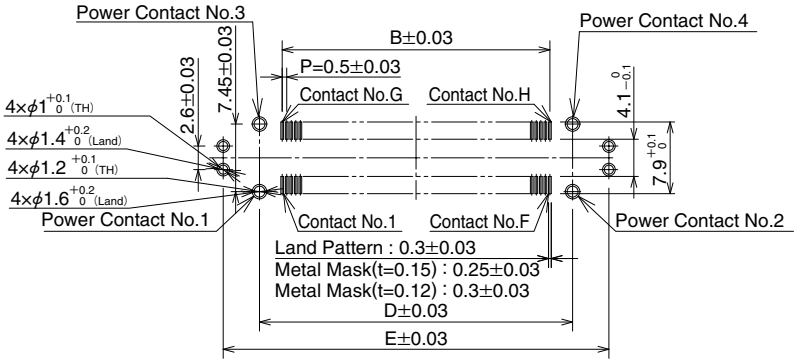

Unit : mm

Part No.	HRS No.	No. of contacts	A	B	C	D	E	F	G	H
FX23-20P-0.5SV20	573-3101-5 00	20	18.7	4.5	11.65	9.5	17.5	10	11	20
FX23-40P-0.5SV20	573-3102-8 00	40	23.7	9.5	16.65	14.5	22.5	20	21	40
FX23-60P-0.5SV20	573-3103-0 00	60	28.7	14.5	21.65	19.5	27.5	30	31	60
FX23-80P-0.5SV20	573-3104-3 00	80	33.7	19.5	26.65	24.5	32.5	40	41	80
FX23-100P-0.5SV20	573-3105-6 00	100	38.7	24.5	31.65	29.5	37.5	50	51	100
FX23-120P-0.5SV20	573-3106-9 00	120	43.7	29.5	36.65	34.5	42.5	60	61	120

Jan.1.2022 Copyright 2022 HIROSE ELECTRIC CO., LTD. All Rights Reserved.

●Vertical receptacle

[FX23-**S-0.5SV]

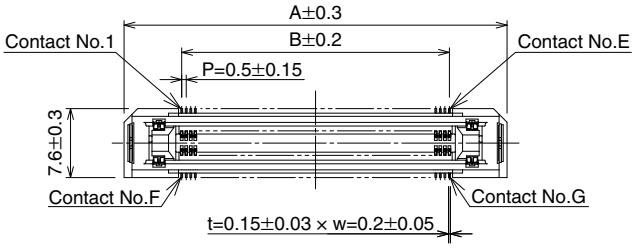

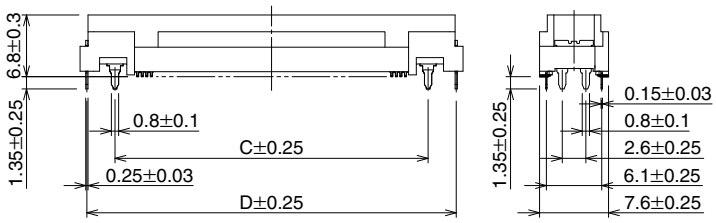

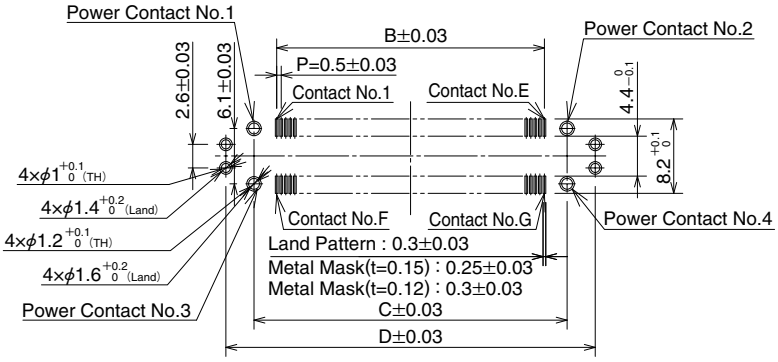

Unit : mm

Part No.	HRS No.	No. of contacts	A	B	C	D	E	F	G
FX23-20S-0.5SV	573-3201-0 00	20	17.2	4.5	9.5	15.7	10	11	20
FX23-40S-0.5SV	573-3202-2 00	40	22.2	9.5	14.5	20.7	20	21	40
FX23-60S-0.5SV	573-3203-5 00	60	27.2	14.5	19.5	25.7	30	31	60
FX23-80S-0.5SV	573-3204-8 00	80	32.2	19.5	24.5	30.7	40	41	80
FX23-100S-0.5SV	573-3205-0 00	100	37.2	24.5	29.5	35.7	50	51	100
FX23-120S-0.5SV	573-3206-3 00	120	42.2	29.5	34.5	40.7	60	61	120

Jan.1.2022 Copyright 2022 HIROSE ELECTRIC CO., LTD. All Rights Reserved.

[FX23-**S-0.5SV10]

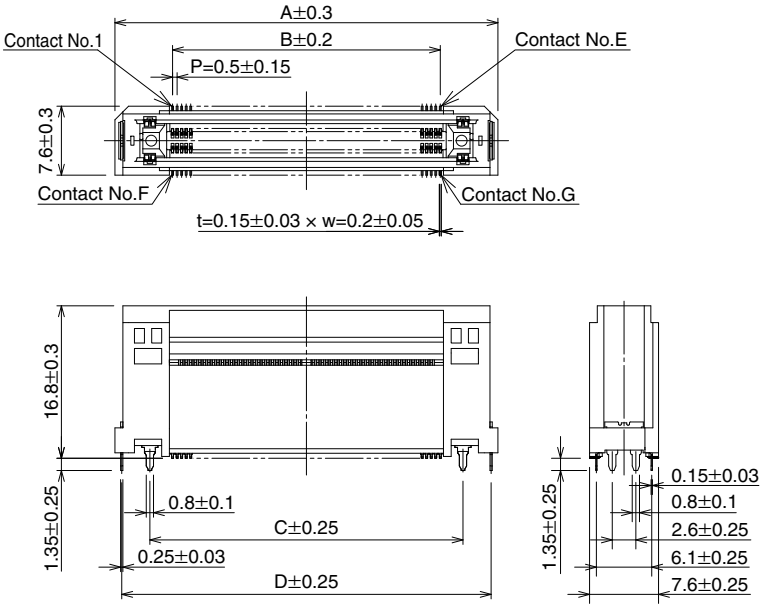

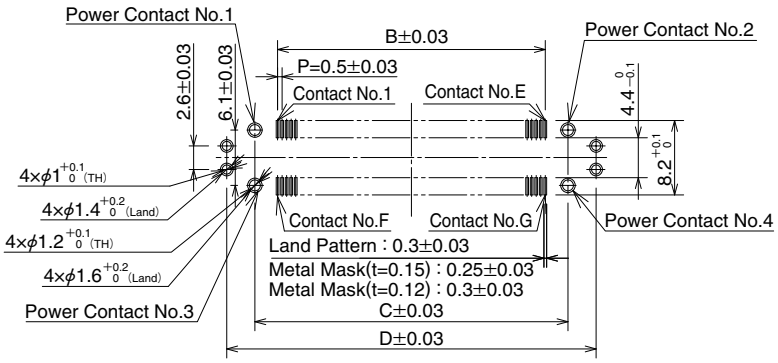

Unit : mm

Part No.	HRS No.	No. of contacts	A	B	C	D	E	F	G
FX23-20S-0.5SV10	573-3301-4 00	20	17.2	4.5	9.5	15.7	10	11	20
FX23-40S-0.5SV10	573-3302-7 00	40	22.2	9.5	14.5	20.7	20	21	40
FX23-60S-0.5SV10	573-3303-0 00	60	27.2	14.5	19.5	25.7	30	31	60
FX23-80S-0.5SV10	573-3304-2 00	80	32.2	19.5	24.5	30.7	40	41	80
FX23-100S-0.5SV10	573-3305-5 00	100	37.2	24.5	29.5	35.7	50	51	100
FX23-120S-0.5SV10	573-3306-8 00	120	42.2	29.5	34.5	40.7	60	61	120

Jan.1.2022 Copyright 2022 HIROSE ELECTRIC CO., LTD. All Rights Reserved.

●Right angle receptacle

[FX23-**S-0.5SH]

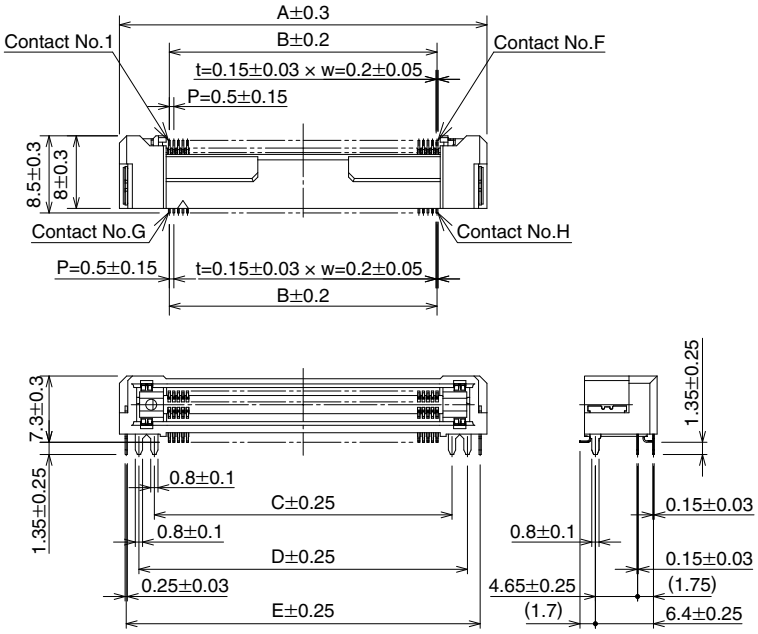

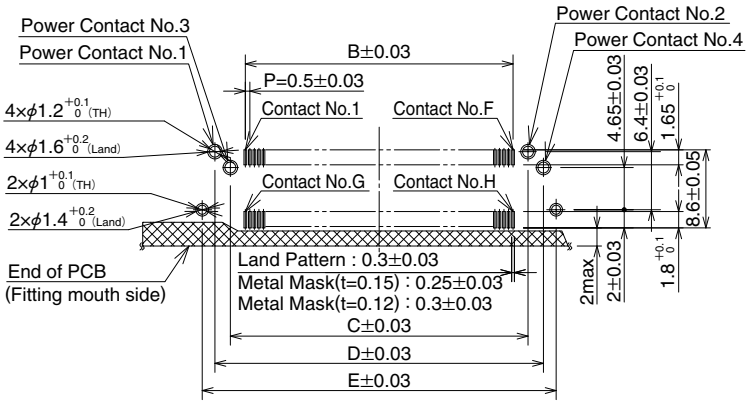

Unit : mm

Part No.	HRS No.	No. of contacts	A	B	C	D	E	F	G	H
FX23-20S-0.5SH	573-3401-9 00	20	15.5	4.5	7.8	11.2	14	10	11	20
FX23-40S-0.5SH	573-3402-1 00	40	20.5	9.5	12.8	16.2	19	20	21	40
FX23-60S-0.5SH	573-3403-4 00	60	25.5	14.5	17.8	21.2	24	30	31	60
FX23-80S-0.5SH	573-3404-7 00	80	30.5	19.5	22.8	26.2	29	40	41	80
FX23-100S-0.5SH	573-3405-0 00	100	35.5	24.5	27.8	31.2	34	50	51	100
FX23-120S-0.5SH	573-3406-2 00	120	40.5	29.5	32.8	36.2	39	60	61	120

Jan.1.2022 Copyright 2022 HIROSE ELECTRIC CO., LTD. All Rights Reserved.

■Product dimensions FX23L series

●Vertical header

［FX23L-＊＊P-0.5SV8］

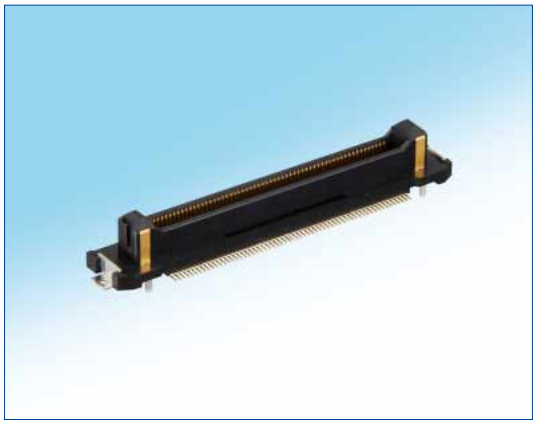

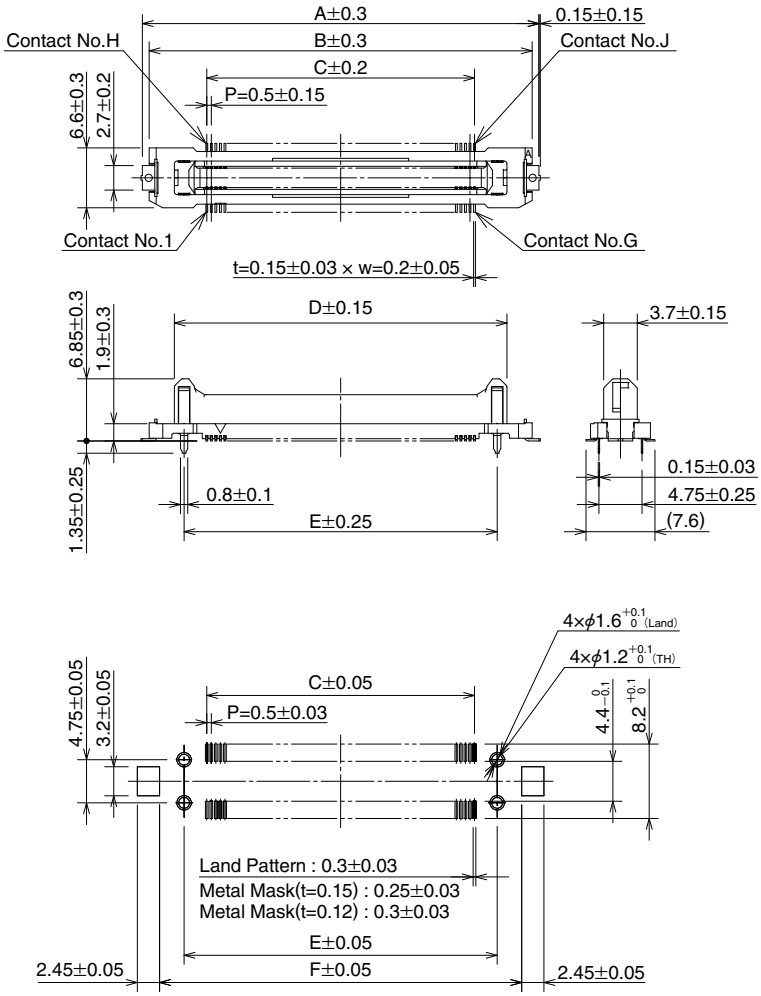

Unit : mm

Part No.	HRS No.	No. of contacts	A	B	C	D	E	F	G	H	J
FX23L-20P-0.5SV8	573-2001-5 00	20	18.7	17.2	4.5	11.65	9.5	14.9	10	11	20
FX23L-40P-0.5SV8	573-2002-8 00	40	23.7	22.2	9.5	16.65	14.5	19.9	20	21	40
FX23L-60P-0.5SV8	573-2003-0 00	60	28.7	27.2	14.5	21.65	19.5	24.9	30	31	60
FX23L-80P-0.5SV8	573-2004-3 00	80	33.7	32.2	19.5	26.65	24.5	29.9	40	41	80
FX23L-100P-0.5SV8	573-2005-6 00	100	38.7	37.2	24.5	31.65	29.5	34.9	50	51	100
FX23L-120P-0.5SV8	573-2006-9 00	120	43.7	42.2	29.5	36.65	34.5	39.9	60	61	120

Jan.1.2022 Copyright 2022 HIROSE ELECTRIC CO., LTD. All Rights Reserved.

[FX23L-**P-0.5SV10]

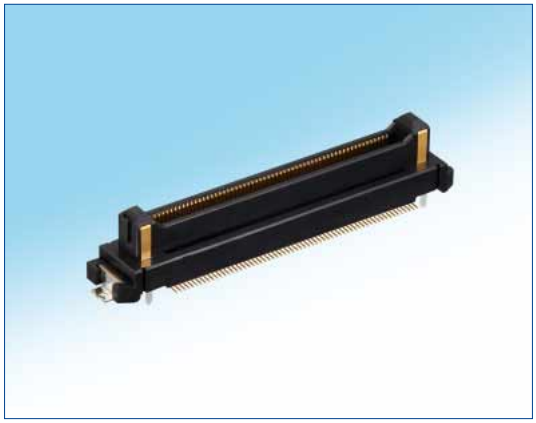

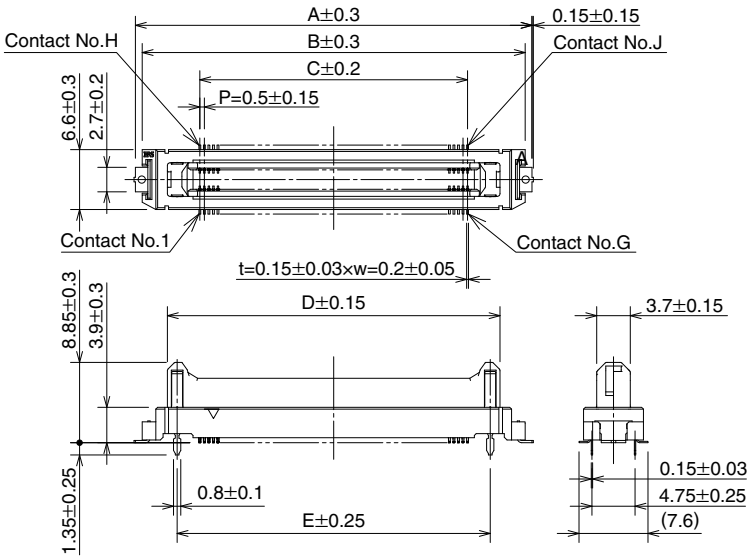

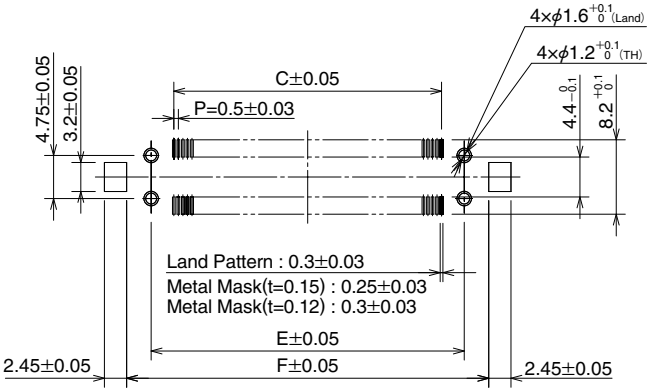

Unit : mm

Part No.	HRS No.	No. of contacts	A	B	C	D	E	F	G	H	J
FX23L-20P-0.5SV10	573-2101-0 00	20	18.7	17.2	4.5	11.65	9.5	14.9	10	11	20
FX23L-40P-0.5SV10	573-2102-2 00	40	23.7	22.2	9.5	16.65	14.5	19.9	20	21	40
FX23L-60P-0.5SV10	573-2103-5 00	60	28.7	27.2	14.5	21.65	19.5	24.9	30	31	60
FX23L-80P-0.5SV10	573-2104-8 00	80	33.7	32.2	19.5	26.65	24.5	29.9	40	41	80
FX23L-100P-0.5SV10	573-2105-0 00	100	38.7	37.2	24.5	31.65	29.5	34.9	50	51	100
FX23L-120P-0.5SV10	573-2106-3 00	120	43.7	42.2	29.5	36.65	34.5	39.9	60	61	120

Jan.1.2022 Copyright 2022 HIROSE ELECTRIC CO., LTD. All Rights Reserved.

[FX23L-**P-0.5SV12]

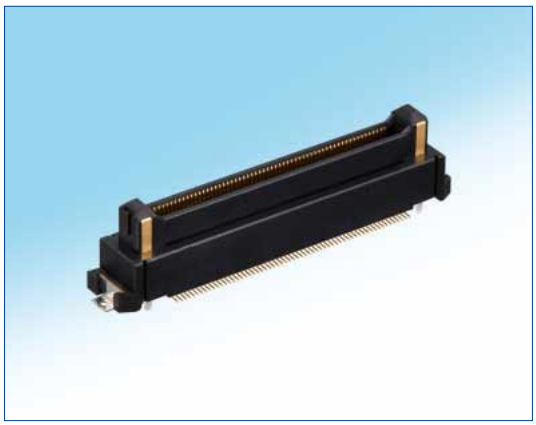

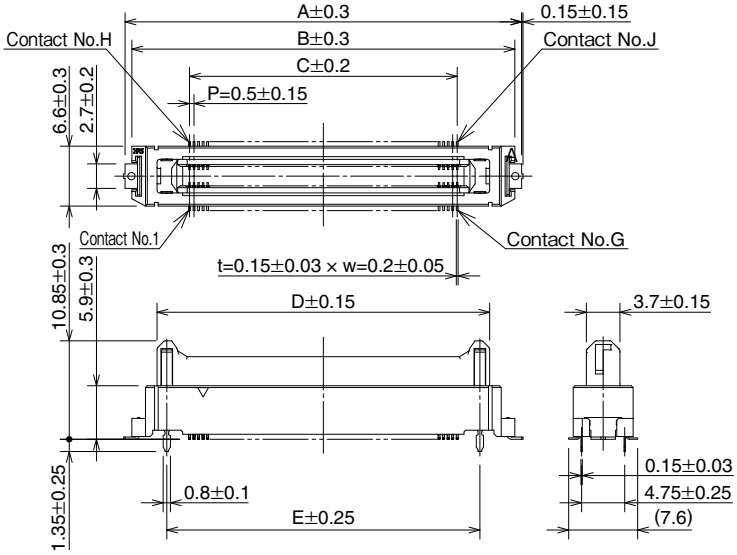

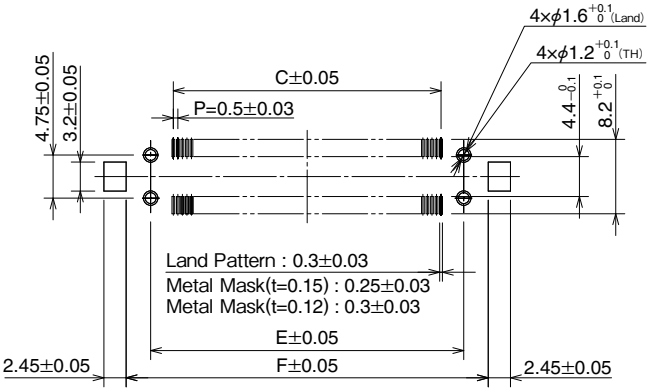

Unit : mm

Part No.	HRS No.	No. of contacts	A	B	C	D	E	F	G	H	J
FX23L-20P-0.5SV12	573-2201-4 00	20	18.7	17.2	4.5	11.65	9.5	14.9	10	11	20
FX23L-40P-0.5SV12	573-2202-7 00	40	23.7	22.2	9.5	16.65	14.5	19.9	20	21	40
FX23L-60P-0.5SV12	573-2203-0 00	60	28.7	27.2	14.5	21.65	19.5	24.9	30	31	60
FX23L-80P-0.5SV12	573-2204-2 00	80	33.7	32.2	19.5	26.65	24.5	29.9	40	41	80
FX23L-100P-0.5SV12	573-2205-5 00	100	38.7	37.2	24.5	31.65	29.5	34.9	50	51	100
FX23L-120P-0.5SV12	573-2206-8 00	120	43.7	42.2	29.5	36.65	34.5	39.9	60	61	120

Jan.1.2022 Copyright 2022 HIROSE ELECTRIC CO., LTD. All Rights Reserved.

●Vertical receptacle

[FX23L-**S-0.5SV]

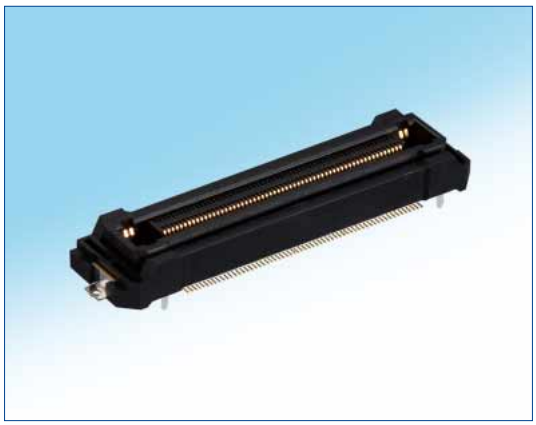

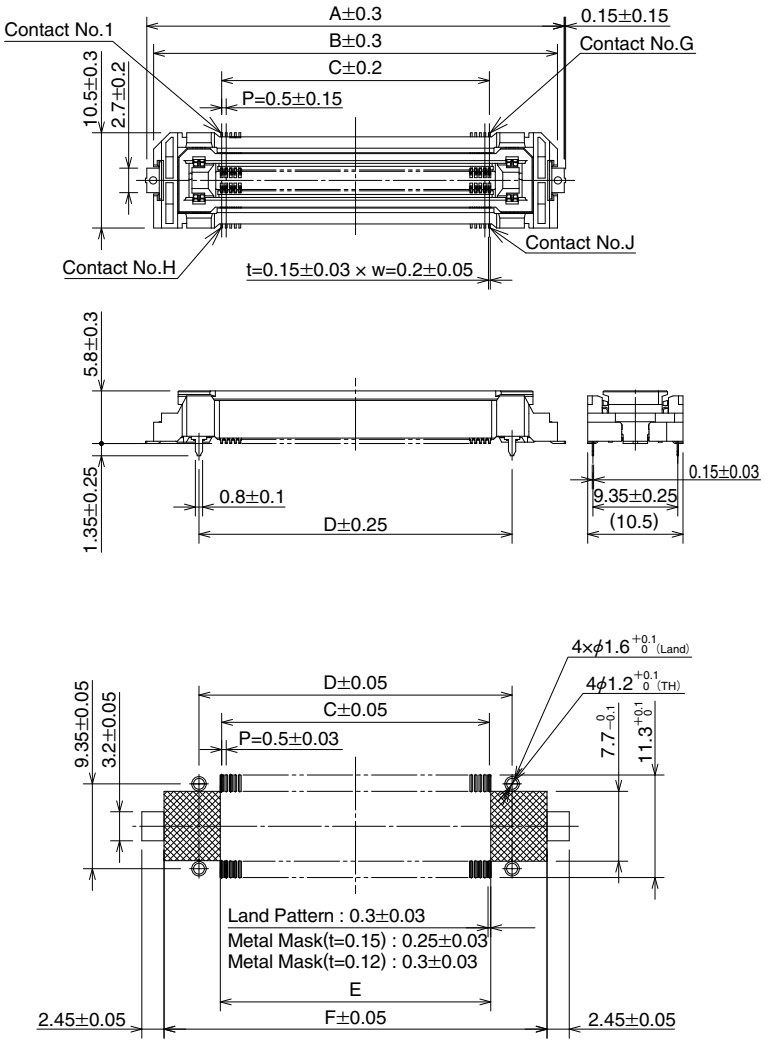

Unit : mm

Part No.	HRS No.	No. of contacts	A	B	C	D	E	F	G	H	J
FX23L-20S-0.5SV	573-2301-9 00	20	21	19.5	4.5	9.5	4.8	17.2	10	11	20
FX23L-40S-0.5SV	573-2302-1 00	40	26	24.5	9.5	14.5	9.8	22.2	20	21	40
FX23L-60S-0.5SV	573-2303-4 00	60	31	29.5	14.5	19.5	14.8	27.2	30	31	60
FX23L-80S-0.5SV	573-2304-7 00	80	36	34.5	19.5	24.5	19.8	32.2	40	41	80
FX23L-100S-0.5SV	573-2305-0 00	100	41	39.5	24.5	29.5	24.8	37.2	50	51	100
FX23L-120S-0.5SV	573-2306-2 00	120	46	44.5	29.5	34.5	29.8	42.2	60	61	120

Jan.1.2022 Copyright 2022 HIROSE ELECTRIC CO., LTD. All Rights Reserved.

◆Tray packaged diagram FX23 series

●Vertical header

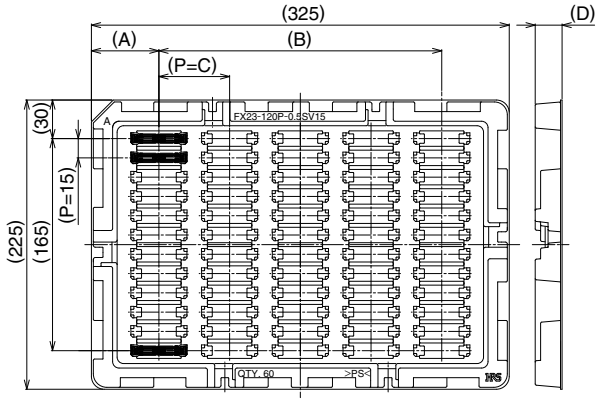

Unit : mm

Part No.	Packaging	A	B	C	D
FX23-20P-0.5SV15	84	50	225	37.5	20.9
FX23-20P-0.5SV20					25.9
FX23-40P-0.5SV15	84	50	225	37.5	20.9
FX23-40P-0.5SV20					25.9
FX23-60P-0.5SV15	84	50	225	37.5	20.9
FX23-60P-0.5SV20					25.9
FX23-80P-0.5SV15	72	50	225	45	20.9
FX23-80P-0.5SV20		47.5	230	46	25.9
FX23-100P-0.5SV15	72	47.5	230	46	20.9
FX23-100P-0.5SV20					25.9
FX23-120P-0.5SV15	60	52.5	220	55	20.9
FX23-120P-0.5SV20					25.9

●Vertical receptacle

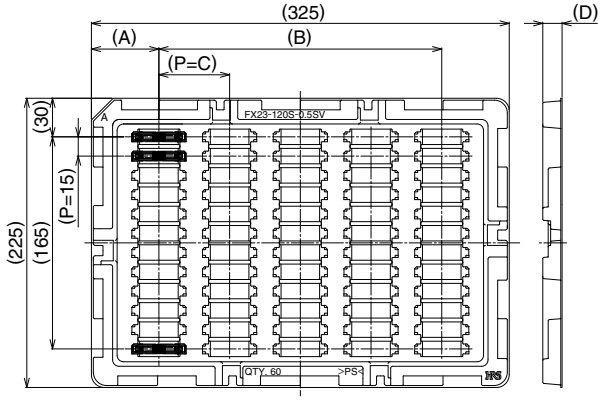

Unit : mm

Part No.	Packaging	A	B	C	D
FX23-20S-0.5SV	84	50	225	37.5	15
FX23-20S-0.5SV10					25.2
FX23-40S-0.5SV	84	50	225	37.5	15
FX23-40S-0.5SV10					25.2
FX23-60S-0.5SV	84	50	225	37.5	15
FX23-60S-0.5SV10					25.2
FX23-80S-0.5SV	72	47.5	230	46	15
FX23-80S-0.5SV10					25.2
FX23-100S-0.5SV	72	47.5	230	46	15
FX23-100S-0.5SV10					25.2
FX23-120S-0.5SV	60	52.5	220	55	15
FX23-120S-0.5SV10					25.2

●Right angle receptacle

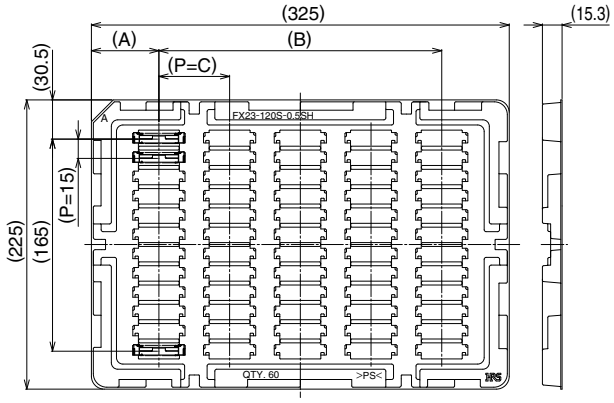

Unit : mm

Part No.	Packaging	A	B	C
FX23-20S-0.5SH	84	50	225	37.5
FX23-40S-0.5SH	84	50	225	37.5
FX23-60S-0.5SH	84	50	225	37.5
FX23-80S-0.5SH	72	50	225	45
FX23-100S-0.5SH	72	47.5	230	46
FX23-120S-0.5SH	60	52.5	220	55

Jan.1.2022 Copyright 2022 HIROSE ELECTRIC CO., LTD. All Rights Reserved.

◆Tray packaged diagram FX23L series

●Vertical header

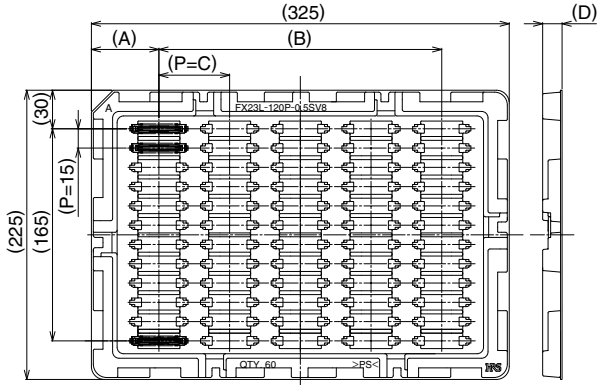

Unit : mm

Part No.	Packaging	A	B	C	D
FX23L-20P-0.5SV8	96	40	245	35	15.1
FX23L-20P-0.5SV10					17.1
FX23L-20P-0.5SV12					19.1
FX23L-40P-0.5SV8	84	50	225	37.5	15.1
FX23L-40P-0.5SV10					17.1
FX23L-40P-0.5SV12					19.1
FX23L-60P-0.5SV8	72	50	225	45	15.1
FX23L-60P-0.5SV10					17.1
FX23L-60P-0.5SV12					19.1
FX23L-80P-0.5SV8	72	50	225	45	15.1
FX23L-80P-0.5SV10					17.1
FX23L-80P-0.5SV12					19.1
FX23L-100P-0.5SV8	60	52.5	220	55	15.1
FX23L-100P-0.5SV10					17.1
FX23L-100P-0.5SV12					19.1
FX23L-120P-0.5SV8	60	52.5	220	55	15.1
FX23L-120P-0.5SV10					17.1
FX23L-120P-0.5SV12					19.1

●Vertical receptacle

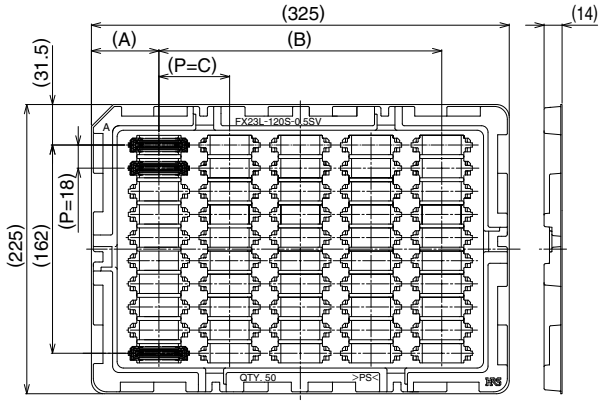

Unit : mm

Part No.	Packaging	A	B	C
FX23L-20S-0.5SV	90	38.5	248	31
FX23L-40S-0.5SV	80	40	245	35
FX23L-60S-0.5SV	70	42.5	240	40
FX23L-80S-0.5SV	60	47.5	230	46
FX23L-100S-0.5SV	50	52.5	220	55
FX23L-120S-0.5SV	50	52.5	220	55

Jan.1.2022 Copyright 2022 HIROSE ELECTRIC CO., LTD. All Rights Reserved.

◆In Regards to Storing FX23 Series

There are two types of tray (A and B) for the FX23 series.
These have been designed to stack in alternating order (A-B-A-B...) for shipping and storage.

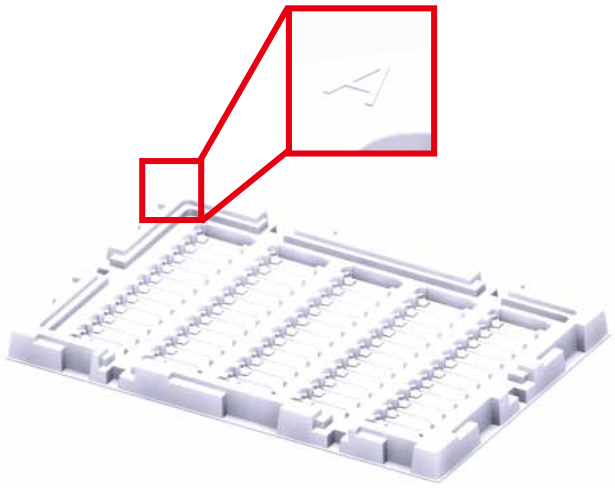

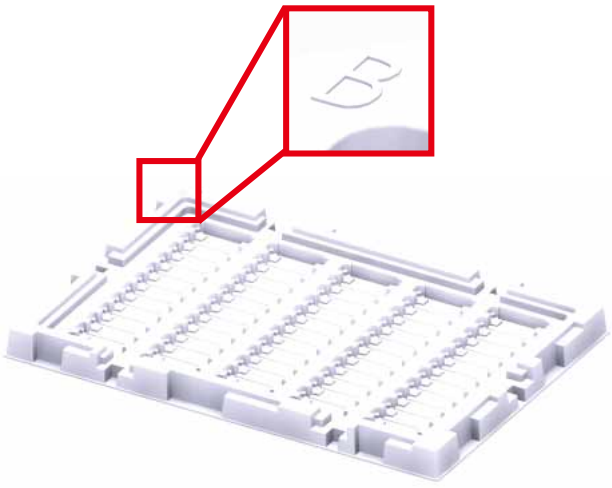

If tray A is stacked on top of another tray A, or if tray B is stacked on top of another tray B, the trays will put a load on the connectors, potentially causing connector breakage or deformation.

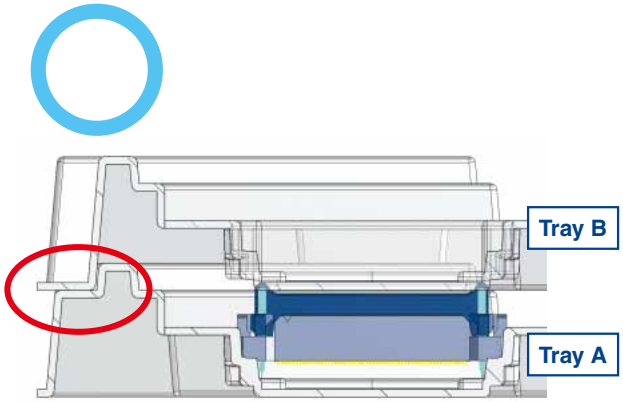

When stacked correctly, the outer structure of the trays will prevent any load from being placed on the connectors below.

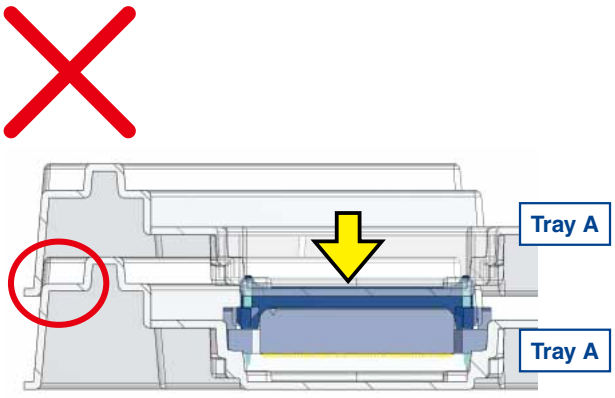

When stacked incorrectly, the outer structure of the trays will not function, resulting in adding load to the connector.

When storing the FX23 series, please ensure that the trays are stacked in alternating order. Thank you.

Jan.1.2022 Copyright 2022 HIROSE ELECTRIC CO., LTD. All Rights Reserved.

Recommended temperature profile

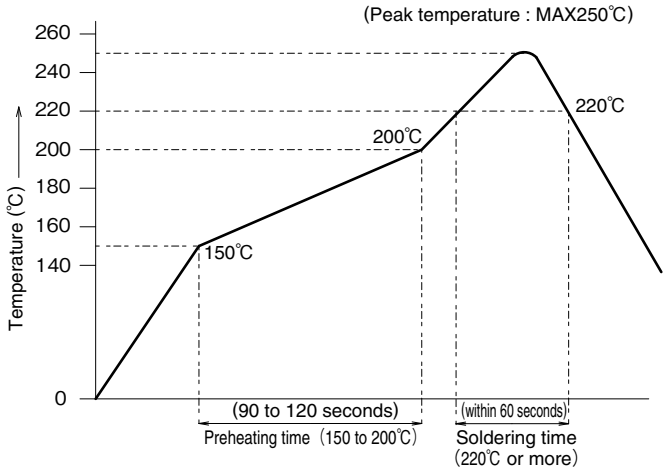

<Applicable conditions>

Test PCB	Dimension	: 110×60×1.6mm
	Material	: Glass epoxy
Solder composition		: Sn-3Ag-0.5Cu
Flux content		: 11wt%
Metal mask thickness		: 0.12mm, 0.15mm
Number of reflow times		: 2 times max.

∗The temperature profile is a reference under the condition of the above settings : Temperature profile may change depending on the conditions such as solder paste types, manufacturers, PCB size, and other soldering materials, please fully check the mounting conditions before use.

Cleaning conditions

●Cleaning with organic solvent

Solvent	Cleaning at normal temperature	Heating cleaning
IPA (Isopropyl alcohol)	○	○

●Cleaning with water

When water-type cleaning agents (terpene, alkaline saponification agents) are used, select cleaning agents based on the 'table of influence' on metals and resins issued by the cleaning agent manufacturer. Caution : Do not leave with any water content left.

●Precautions in cleaning

When cleaning the parts with organic solvents and water-type agents, if flux or cleaning agents remain in the connector, it could cause the deterioration of electric performance. Please be sure to check if adequate cleaning has been carried out.

Precautions in use

●About the specified dimension between PCBs

The dimension between PCBs shall be within the following range :

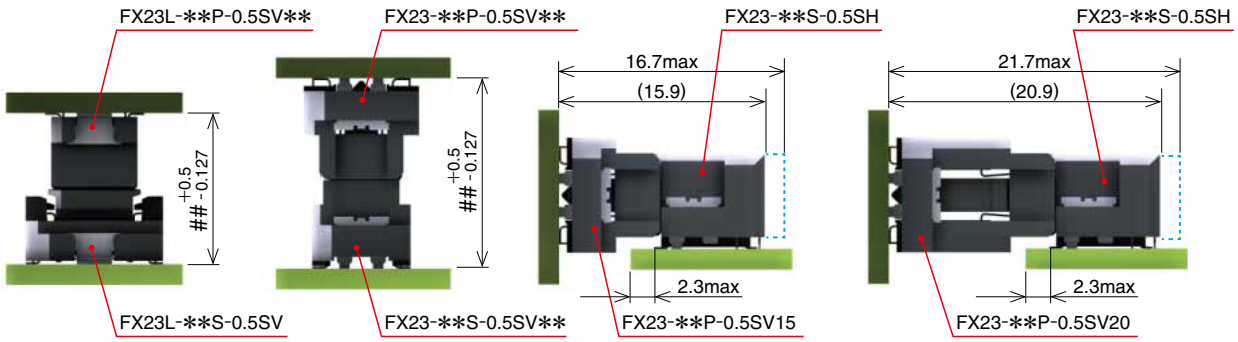

: Stack height

Jan.1.2022 Copyright 2022 HIROSE ELECTRIC CO., LTD. All Rights Reserved.

●Fixation among PCBs

Please take measures to fix the PCB other than using connectors.

●Cautions in mating operations

・This connector is designed to prevent reverse insertion. The connector could be damaged if excessive force is exerted when mating. Avoid excessive force when mating. Mate only after confirming the following connector properties (chamfer of the external face) :

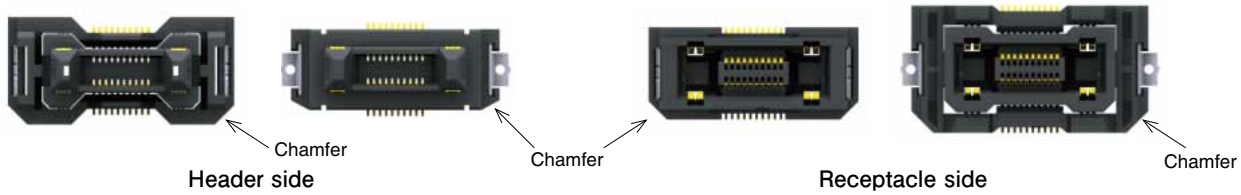

・The allowable misalignment is ±1.2mm in both the X and Y directions. After mating is started, proceed with the operation along a straight line without forcing the connector.

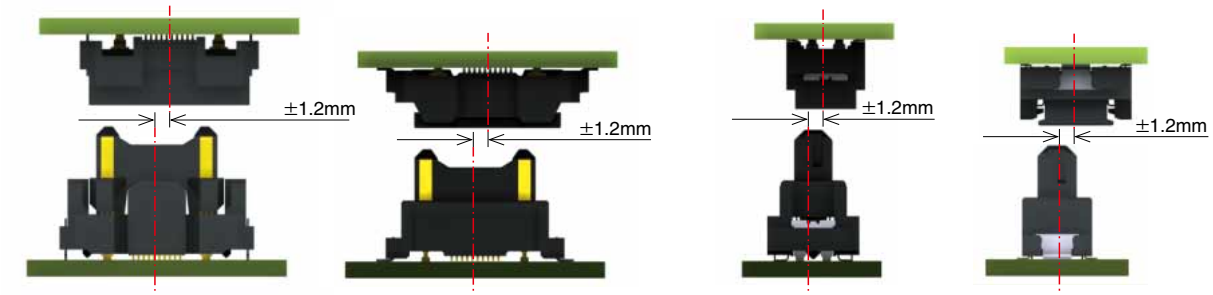

X direction (longitudinal direction) Y direction (transverse direction)

・When mating / un-mating, it is strongly recommended to insert or remove in a straight line. If not possible, the operation shall be carried out within the following angle.
Moreover, during the mating operation, be sure to proceed without forcibly applying a load to the connector. Allow the connector to be placed straight when the mating operation is completed.

X direction (longitudinal direction) ⇒ for 20, 40, 60-pos. : within 2° ; for 80, 100, 120-pos. : within 10°
Y direction (transverse direction) ⇒ within 0.5°

(However, this is not a recommended operation. Damage to the connector could occur.)

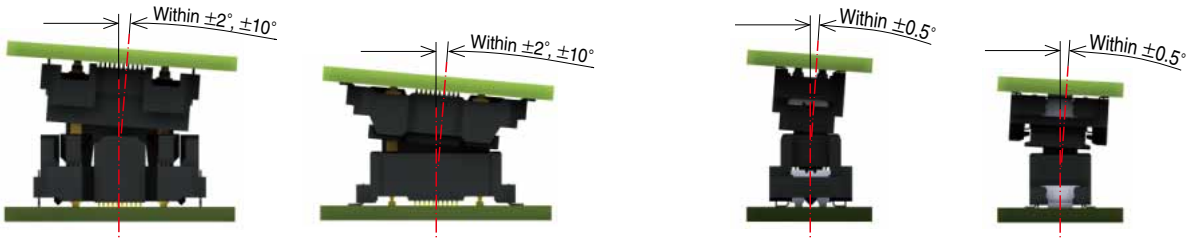

X direction (longitudinal direction) Y direction (transverse direction)

●Permissible position deviation in the mated state (floating movable amount)

This connector is designed to float when mated, the permissible PCB position deviation in the mated state is ±0.6mm in both the X and Y directions.
However, it is not applicable to absorbing when the position deviation amount is continually changing due to vibration etc. Be sure to secure PCBs after mating. Additionally, the number of repetitive floating operations shall be according to the number of connector insertion/withdrawal cycles.

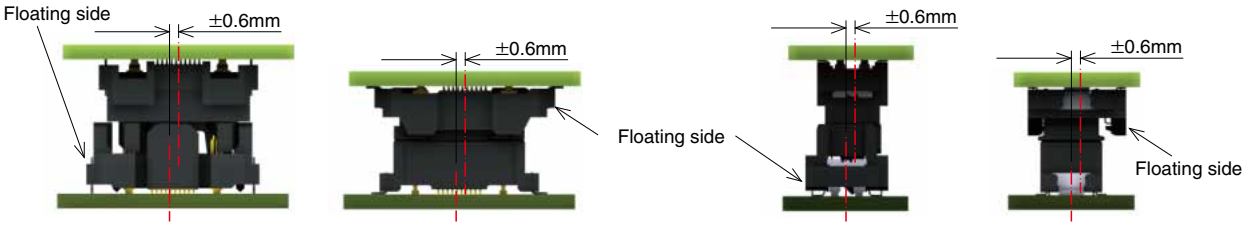

X direction (longitudinal direction) Y direction (transverse direction)

HIROSE ELECTRIC CO.,LTD.
2-6-3,Nakagawa Chuoh,Tsuzuki-Ku,Yokohama-Shi 224-8540,JAPAN
TEL: +81-45-620-3526 Fax: +81-45-591-3726
http://www.hirose.com
http://www.hirose-connectors.com

Jan.1.2022 Copyright 2022 HIROSE ELECTRIC CO., LTD. All Rights Reserved.

The characteristics and the specifications contained herein are for reference purpose. Please refer to the latest customer drawings prior to use.
The contents of this catalog are current as of date of 06/2019. Contents are subject to change without notice for the purpose of improvements.