FAIRCHILD™





Is Now Part of

ON Semiconductor®

To learn more about ON Semiconductor, please visit our website at www.onsemi.com

OBSOLETE
THIS DEVICE IS OBSOLETE
PLEASE CONTACT YOUR ON SEMICONDUCTOR
REPRESENTATIVE FOR INFORMATION

Please note: As part of the Fairchild Semiconductor integration, some of the Fairchild orderable part numbers will need to change in order to meet ON Semiconductor's system requirements. Since the ON Semiconductor product management systems do not have the ability to manage part nomenclature that utilizes an underscore (_), the underscore (_) in the Fairchild part numbers will be changed to a dash (-). This document may contain device numbers with an underscore (_). Please check the ON Semiconductor website to verify the updated device numbers. The most current and up-to-date ordering information can be found at www.onsemi.com. Please email any questions regarding the system integration to Fairchild_questions@onsemi.com.

ON Semiconductor and the ON Semiconductor logo are trademarks of Semiconductor Components Industries, LLC dba ON Semiconductor or its subsidiaries in the United States and/or other countries. ON Semiconductor owns the rights to a number of patents, trademarks, copyrights, trade secrets, and other intellectual property. A listing of ON Semiconductor's product/patent coverage may be accessed at www.onsemi.com/site/pdf/Patent-Marking.pdf. ON Semiconductor reserves the right to make changes without further notice to any products herein. ON Semiconductor makes no warranty, representation or guarantee regarding the suitability of its products for any particular purpose, nor does ON Semiconductor assume any liability arising out of the application or use of any product or circuit, and specifically disclaims any and all liability, including without limitation special, consequential or incidental damages. Buyer is responsible for its products and applications using ON Semiconductor products, including compliance with all laws, regulations and safety requirements or standards, regardless of any support or applications information provided by ON Semiconductor. "Typical" parameters which may be provided in ON Semiconductor data sheets and/or specifications can and do vary in different applications and actual performance may vary over time. All operating parameters, including "Typicals" must be validated for each customer application by customer's technical experts. ON Semiconductor does not convey any license under its patent rights nor the rights of others. ON Semiconductor products are not designed, intended, or authorized for use as a critical component in life support systems or any FDA Class 3 medical devices or medical devices with a same or similar classification in a foreign jurisdiction or any devices intended for implantation in the human body. Should Buyer purchase or use ON Semiconductor products for any such unintended or unauthorized application, Buyer shall indemnify and hold ON Semiconductor and its officers, employees, subsidiaries, affiliates, and distributors harmless against all claims, costs, damages, and expenses, and reasonable attorney fees arising out of, directly or indirectly, any claim of personal injury or death associated with such unintended or unauthorized use, even if such claim alleges that ON Semiconductor was negligent regarding the design or manufacture of the part. ON Semiconductor is an Equal Opportunity/Affirmative Action Employer. This literature is subject to all applicable copyright laws and is not for resale in any manner.

FAIRCHILD SEMICONDUCTOR®

November 2013

L272 / L272A
Dual Power Operational Amplifier

Features

- Output Current up to 0.7 A
- Operates at Low Voltage ($V_{S(MIN)}$ = 4 V)
- Low Saturation Voltage (I_P = 0.5 A, V_O = 1.5 V)
- Thermal Shutdown (TSD = 160°C)
- Ground-Compatible Inputs
- Large Common Mode & Differential Mode Range

Applications

- Servo Amplifier
- Power Supply
- Compact Disc
- VCR
- Monitor

Description

The L272 and L272A are high-power dual operational amplifiers provided in a MDIP 8-lead package. The operational amplifier is designed for low-impedance loads and delivers output current up to 0.7 A. The L272A offers tighter specifications for input bias current, input offset voltage, and input offset current. The L272 and L272A can be used in a wide range of applications, including power supply, VCR, monitor, servo amplifier, compact disc, etc.

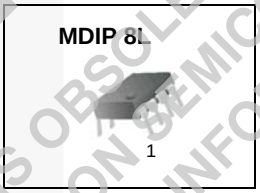

OBSOLETE
THIS DEVICE IS OBSOLETE
PLEASE CONTACT YOUR ON SEMICONDUCTOR
REPRESENTATIVE FOR INFORMATION

Ordering Information

Part Number	Operating Temperature Range	Top Mark	Package	Packing Method
L272M	-40 to +85°C	L272M	MDIP 8L	Rail
L272AM		L272AM	MDIP 8L	Rail

Block Diagram

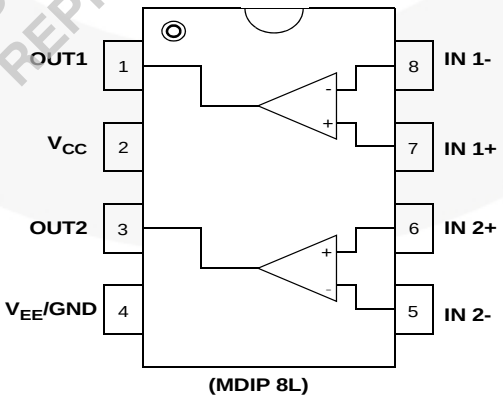

Figure 1. Block Diagram

© 2001 Fairchild Semiconductor Corporation

Pin Descriptions

Pin Number	Name	Description
1	OUTPUT1	Amplifier Output 1
2	VCC	Positive Supply Voltage
3	OUTPUT2	Amplifier Output 2
4	VEE/GND	Negative Supply Voltage (GND)
5	INPUT-2	Amplifier Negative Input 2
6	INPUT+2	Amplifier Positive Input 2
7	INPUT+1	Amplifier Positive Input 1
8	INPUT-1	Amplifier Negative Input 1

Absolute Maximum Ratings(1)

Stresses exceeding the absolute maximum ratings may damage the device. The device may not function or be operable above the recommended operating conditions and stressing the parts to these levels is not recommended. In addition, extended exposure to stresses above the recommended operating conditions may affect device reliability. The absolute maximum ratings are stress ratings only. Values are at T_A = 25°C unless otherwise noted.

Symbol	Parameter	Value	Unit
V_{CC}	Supply Voltage	40	V
V_I	Input Voltage	V_S	V
$V_{I(DIFF)}$	Differential Input Voltage	$\pm V_S$	V
I_O	DC Output Current	0.7	A
I_P	Peak Output Current (Non-Repetitive)	1	A
T_{OP}	Operating Temperature Range	-40 to 85	°C
T_{STG}, T_J	Storage and Junction Temperature Range	-40 to 150	°C

Note:

1. The “Absolute Maximum Ratings” are those values beyond which the safety of the device cannot be guaranteed. The device should not be operated at these limits. The parametric values defined in the Electrical Characteristics tables are not guaranteed at the absolute maximum ratings.

Thermal Characteristics

Values are at T_A = 25°C unless otherwise noted**.**

Symbol	Parameter	Value	Unit
P_D	Total Power Dissipation (T_A = 50°C)	1	W
$R_{\theta JA}$	Thermal Resistance, Junction to Ambient	100	°C/W

OBSOLETE
THIS DEVICE IS OBSOLETE
PLEASE CONTACT YOUR ON SEMICONDUCTOR
REPRESENTATIVE FOR INFORMATION

Electrical Characteristics (L272)

V_{CC} = +12 V, V_{EE} = -12 V; Values are at T_A = 25°C unless otherwise noted.

Symbol	Parameter	Conditions	Min.	Typ.	Max.	Unit
V_S	Supply Voltage (V_{CC} - V_{EE})		4		28	V
I_S	Supply Current	$V_O = V_{CC}/2$, V_{CC} = 24 V, V_{EE} = 0 V		8.0	12.0	mA
		$V_O = V_{CC}/2$, V_{CC} = 12 V, V_{EE} = 0 V		7.5	11.0	
I_{BIAS}	Input Bias Current			0.3	2.5	µA
V_{IO}	Input Offset Voltage			15	60	mV
I_{IO}	Input Offset Current			50	250	nA
SR	Slew Rate	V_{IN} = 1V_{PP}, Unit Gain		1		V/µs
GBW	Gain-Bandwidth Product			350		kHz
R_I	Input Resistance		500			kΩ
G_V	Large-Signal Voltage Gain	$V_{O(pp)}$ = ±10 V	65	75		dB
e_N	Input Noise Voltage	B = 20 kHz		10		µV
I_N	Input Noise Current	B = 20 kHz		200		pA
CMRR	Common Mode Rejection Ratio		60	75		dB
PSRR	Supply Voltage Rejection Ratio	V_{CC} = +15 V, V_{EE} = -15 V V_{CC} = +5 V, V_{EE} = -5 V	54	62		dB
V_O	Output Voltage Swing	V_{CC} = 24 V, V_{EE} = 0 V, I_P = 0.1 A	21.0	23.0		V
		V_{CC} = 24 V, V_{EE} = 0 V, I_P = 0.5 A	21.0	22.5		
C_S	Channel Separation	f = 1 kHz, R_L = 10 Ω, G_V = 30 dB		60		dB
THD	Total Harmonic Distortion	f = 1 kHz, G_V = 1 dB, R_L = ∞		0.5		%
TSD	Thermal Shutdown Temperature(2)			160		°C

Note:

2. Guaranteed by design; not 100% tested in production.

OBSOLETE
THIS DEVICE IS OBSOLETE
PLEASE CONTACT FOR ON SEMICONDUCTOR
REPRESENTATIVE FOR INFORMATION

Electrical Characteristics (L272A)

V_{CC} = +12 V, V_{EE} = -12 V; Values are at T_A = 25°C unless otherwise noted.

Symbol	Parameter	Conditions	Min.	Typ.	Max.	Unit
V_S	Supply Voltage (V_{CC} - V_{EE})		4		28	V
I_S	Supply Current	$V_O = V_{CC}/2$ V_{CC} = 24 V, V_{EE} = 0 V		8.0	12.0	mA
		$V_O = V_{CC}/2$, V_{CC} = 12 V, V_{EE} = 0 V		7.5	11.0	mA
I_{BIAS}	Input Bias Current			0.1	1.0	µA
V_{IO}	Input Offset Voltage			7	30	mV
I_{IO}	Input Offset Current			20	100	nA
SR	Slew Rate	V_{IN} = 1V_{PP}, Unit Gain		1		V/µs
GBW	Gain-Bandwidth Product			350		kHz
R_I	Input Resistance		500			kΩ
G_V	Large-Signal Voltage Gain	$V_{O(pp)}$ = ±10 V	65	75		dB
e_N	Input Noise Voltage	B = 20 kHz		10		µV
I_N	Input Noise Current	B = 20 kHz		200		pA
CMRR	Common Mode Rejection Ratio		60	75		dB
PSRR	Supply Voltage Rejection Ratio	V_{CC} = +15 V, V_{EE} = -15 V V_{CC} = +5 V, V_{EE} = -5 V	54	62		dB
V_O	Output Voltage Swing	V_{CC} = 24 V, V_{EE} = 0 V, Ip = 0.1 A	21.0	23.0		V
		V_{CC} = 24 V, V_{EE} = 0 V, Ip = 0.5 A	21.0	22.5		V
C_S	Channel Separation	f = 1 kHz, R_L = 10 Ω, G_V = 30 dB		60		dB
THD	Total Harmonic Distortion	f = 1 kHz, G_V = 1 dB, R_L = ∞		0.5		%
TSD	Thermal Shutdown Temperature(3)			160		°C

Note:

3. Guaranteed by design; not 100% tested in production.

OBSOLETE
THIS DEVICE IS OBSOLETE
PLEASE CONTACT FOR ON SEMICONDUCTOR
REPRESENTATIVE FOR INFORMATION

Typical Performance Characteristics

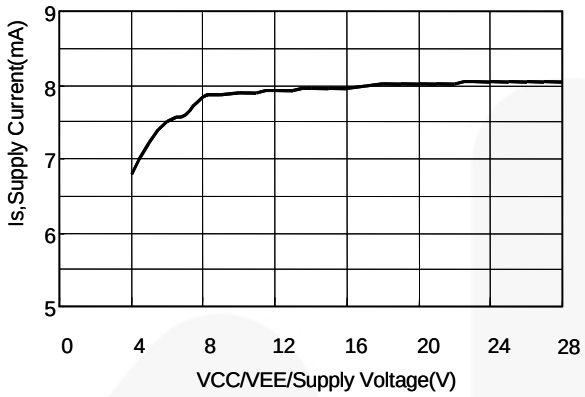

Figure 2. Supply Voltage vs. Supply Current with No Load

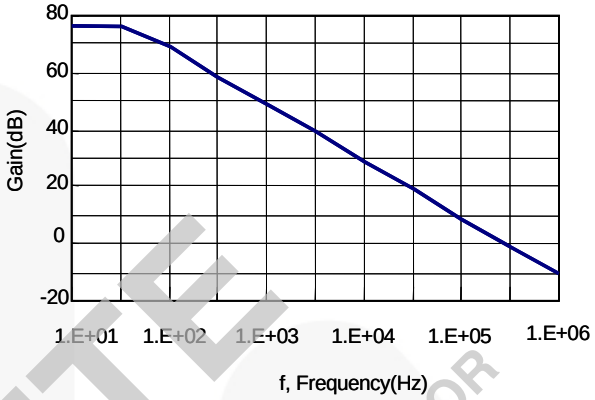

Figure 3. Open-Loop Voltage Gain

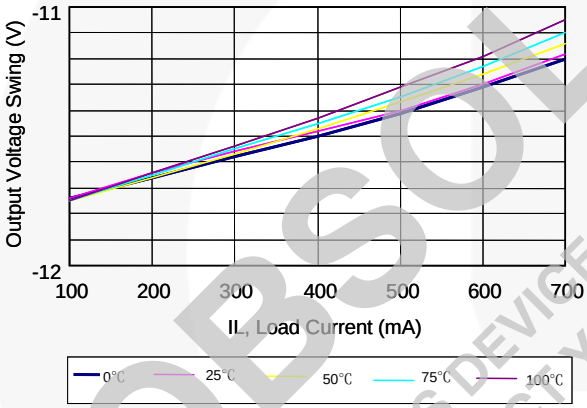

Figure 4. Output Voltage Swing vs. Load Current

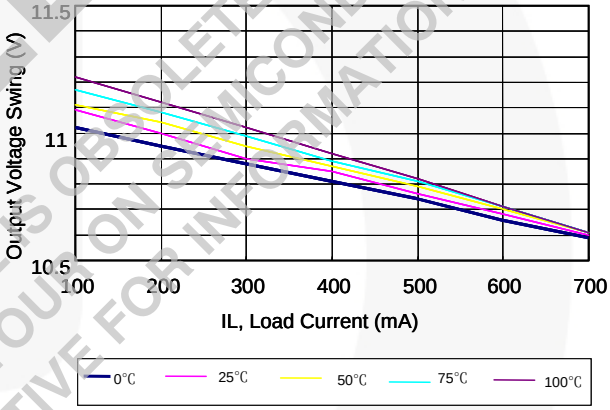

Figure 5. Output Voltage Swing vs. Load Current

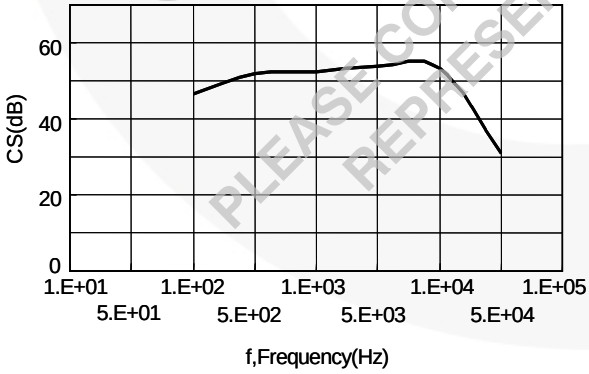

Figure 6. Channel Separation vs. Frequency

OBSOLETE
THIS DEVICE IS OBSOLETE
PLEASE CONTACT YOUT ON SEMICONDUCTOR
REPRESENTATIVE FOR INFORMATION

Applications

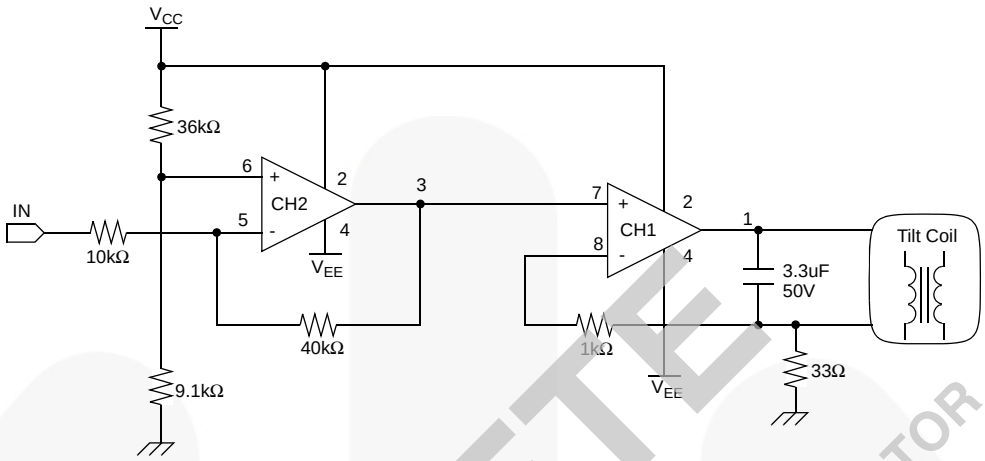

Figure 7. Tilt Coil, Current-Control Circuit in Monitor

OBSOLETE
THIS DEVICE IS OBSOLETE
PLEASE CONTACT YOUR ON SEMICONDUCTOR
REPRESENTATIVE FOR INFORMATION

Physical Dimensions

MDIP 8L

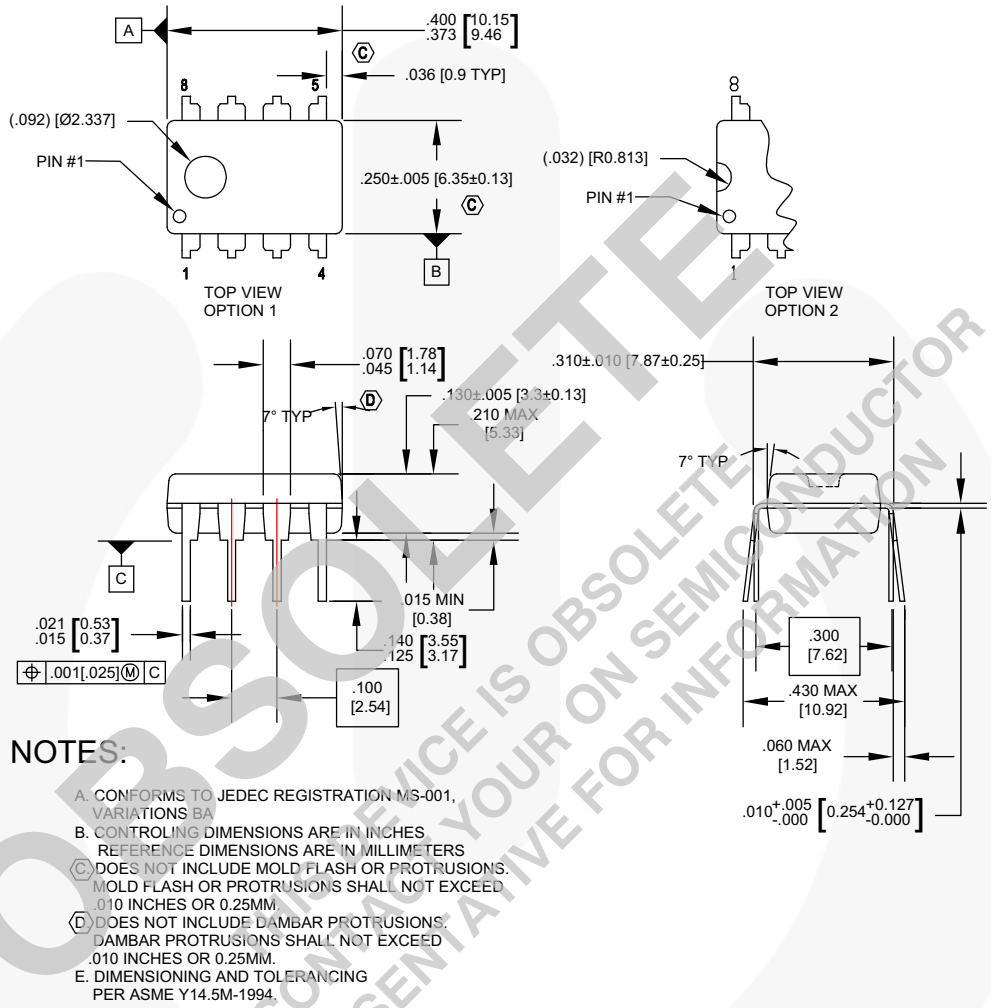

NOTES:

A. CONFORMS TO JEDEC REGISTRATION MS-001, VARIATIONS BA

B. CONTROLLING DIMENSIONS ARE IN INCHES. REFERENCE DIMENSIONS ARE IN MILLIMETERS

C. DOES NOT INCLUDE MOLD FLASH OR PROTRUSIONS. MOLD FLASH OR PROTRUSIONS SHALL NOT EXCEED .010 INCHES OR 0.25MM.

D. DOES NOT INCLUDE DAMBAR PROTRUSIONS. DAMBAR PROTRUSIONS SHALL NOT EXCEED .010 INCHES OR 0.25MM.

E. DIMENSIONING AND TOLERANCING PER ASME Y14.5M-1994.

N08EREVG

Figure 3. 8-LEAD, MDIP, JEDEC MS-001, .300-INCH WIDE

Package drawings are provided as a service to customers considering Fairchild components. Drawings may change in any manner without notice. Please note the revision and/or date on the drawing and contact a Fairchild Semiconductor representative to verify or obtain the most recent revision. Package specifications do not expand the terms of Fairchild's worldwide terms and conditions, specifically the warranty therein, which covers Fairchild products.

Always visit Fairchild Semiconductor's online packaging area for the most recent package drawings:
http://www.fairchildsemi.com/dwg/N0/N08E.pdf.

For current tape and reel specifications, visit Fairchild Semiconductor's online packaging area:
http://www.fairchildsemi.com/packing_dwg/PKG-N08E.pdf.

OBSOLETE
THIS DEVICE IS OBSOLETE
PLEASE CONTACT YOUR ON SEMICONDUCTOR
REPRESENTATIVE FOR INFORMATION

FAIRCHILD SEMICONDUCTOR®

TRADEMARKS

The following includes registered and unregistered trademarks and service marks, owned by Fairchild Semiconductor and/or its global subsidiaries, and is not intended to be an exhaustive list of all such trademarks.

AccuPower™
AX-CAP®*
BitSiC™
Build it Now™
CorePLUS™
CorePOWER™
CROSSVOLT™
CTL™
Current Transfer Logic™
DEUXPEED®
Dual Cool™
EcoSPARK®
EfficientMax™
ESBC™
F®
Fairchild®
Fairchild Semiconductor®
FACT Quiet Series™
FACT®
FAST®
FastvCore™
FETBench™
FPS™
F-PFS™
FRFET®
Global Power Resource SM
GreenBridge™
Green FPS™
Green FPS™ e-Series™
G*max*™
GTO™
IntelliMAX™
ISOPLANAR™
Making Small Speakers Sound Louder and Better™
MegaBuck™
MICROCOUPLER™
MicroFET™
MicroPak™
MicroPak2™
MillerDrive™
MotionMax™
mWSaver®
OptoHiT™
OPTOLOGIC®
OPTOPLANAR®
PowerTrench®
PowerXS™
Programmable Active Droop™
QFET®
QS™
Quiet Series™
RapidConfigure™
™
Saving our world, 1mW/W/kW at a time™
SignalWise™
SmartMax™
SMART START™
Solutions for Your Success™
SPM®
STEALTH™
SuperFET®
SuperSOT™-3
SuperSOT™-6
SuperSOT™-8
SupreMOS®
SyncFET™
Sync-Lock™
SYSTEM GENERAL®*
TinyBoost®
TinyBuck®
TinyCalc™
TinyLogic®
TINYOPTO™
TinyPower™
TinyPWM™
TinyWire™
TranSiC™
TriFault Detect™
TRUECURRENT®*
μSerDes™
SerDes
UHC®
Ultra FRFET™
UniFET™
VCX™
VisualMax™
VoltagePlus™
XS™

* Trademarks of System General Corporation, used under license by Fairchild Semiconductor.

DISCLAIMER

FAIRCHILD SEMICONDUCTOR RESERVES THE RIGHT TO MAKE CHANGES WITHOUT FURTHER NOTICE TO ANY PRODUCTS HEREIN TO IMPROVE RELIABILITY, FUNCTION, OR DESIGN. FAIRCHILD DOES NOT ASSUME ANY LIABILITY ARISING OUT OF THE APPLICATION OR USE OF ANY PRODUCT OR CIRCUIT DESCRIBED HEREIN; NEITHER DOES IT CONVEY ANY LICENSE UNDER ITS PATENT RIGHTS, NOR THE RIGHTS OF OTHERS. THESE SPECIFICATIONS DO NOT EXPAND THE TERMS OF FAIRCHILD'S WORLDWIDE TERMS AND CONDITIONS, SPECIFICALLY THE WARRANTY THEREIN, WHICH COVERS THESE PRODUCTS.

LIFE SUPPORT POLICY

FAIRCHILD'S PRODUCTS ARE NOT AUTHORIZED FOR USE AS CRITICAL COMPONENTS IN LIFE SUPPORT DEVICES OR SYSTEMS WITHOUT THE EXPRESS WRITTEN APPROVAL OF FAIRCHILD SEMICONDUCTOR CORPORATION.

As used herein:

1. Life support devices or systems are devices or systems which, (a) are intended for surgical implant into the body or (b) support or sustain life, and (c) whose failure to perform when properly used in accordance with instructions for use provided in the labeling, can be reasonably expected to result in a significant injury of the user.
2. A critical component in any component of a life support, device, or system whose failure to perform can be reasonably expected to cause the failure of the life support device or system, or to affect its safety or effectiveness.

ANTI-COUNTERFEITING POLICY

Fairchild Semiconductor Corporation's Anti-Counterfeiting Policy. Fairchild's Anti-Counterfeiting Policy is also stated on our external website, www.fairchildsemi.com, under Sales Support.

Counterfeiting of semiconductor parts is a growing problem in the industry. All manufacturers of semiconductor products are experiencing counterfeiting of their parts. Customers who inadvertently purchase counterfeit parts experience many problems such as loss of brand reputation, substandard performance, failed applications, and increased cost of production and manufacturing delays. Fairchild is taking strong measures to protect ourselves and our customers from the proliferation of counterfeit parts. Fairchild strongly encourages customers to purchase Fairchild parts either directly from Fairchild or from Authorized Fairchild Distributors who are listed by country on our web page cited above. Products customers buy either from Fairchild directly or from Authorized Fairchild Distributors are genuine parts, have full traceability, meet Fairchild's quality standards for handling and storage and provide access to Fairchild's full range of up-to-date technical and product information. Fairchild and our Authorized Distributors will stand behind all warranties and will appropriately address any warranty issues that may arise. Fairchild will not provide any warranty coverage or other assistance for parts bought from Unauthorized Sources. Fairchild is committed to combat this global problem and encourage our customers to do their part in stopping this practice by buying direct or from authorized distributors.

PRODUCT STATUS DEFINITIONS

Definition of Terms

Datasheet Identification	Product Status	Definition
Advance Information	Formative / In Design	Datasheet contains the design specifications for product development. Specifications may change in any manner without notice.
Preliminary	First Production	Datasheet contains preliminary data; supplementary data will be published at a later date. Fairchild Semiconductor reserves the right to make changes at any time without notice to improve design.
No Identification Needed	Full Production	Datasheet contains final specifications. Fairchild Semiconductor reserves the right to make changes at any time without notice to improve the design.
Obsolete	Not In Production	Datasheet contains specifications on a product that is discontinued by Fairchild Semiconductor. The datasheet is for reference information only.

Rev. I66

OBSOLETE
THIS DEVICE IS OBSOLETE
PLEASE CONTACT YOUR ON SEMICONDUCTOR
REPRESENTATIVE FOR INFORMATION

OBSOLETE
THIS DEVICE IS OBSOLETE
PLEASE CONTACT YOUR ON SEMICONDUCTOR
REPRESENTATIVE FOR INFORMATION

ON Semiconductor and ON are trademarks of Semiconductor Components Industries, LLC dba ON Semiconductor or its subsidiaries in the United States and/or other countries. ON Semiconductor owns the rights to a number of patents, trademarks, copyrights, trade secrets, and other intellectual property. A listing of ON Semiconductor's product/patent coverage may be accessed at www.onsemi.com/site/pdf/Patent−Marking.pdf. ON Semiconductor reserves the right to make changes without further notice to any products herein. ON Semiconductor makes no warranty, representation or guarantee regarding the suitability of its products for any particular purpose, nor does ON Semiconductor assume any liability arising out of the application or use of any product or circuit, and specifically disclaims any and all liability, including without limitation special, consequential or incidental damages. Buyer is responsible for its products and applications using ON Semiconductor products, including compliance with all laws, regulations and safety requirements or standards, regardless of any support or applications information provided by ON Semiconductor. "Typical" parameters which may be provided in ON Semiconductor data sheets and/or specifications can and do vary in different applications and actual performance may vary over time. All operating parameters, including "Typicals" must be validated for each customer application by customer's technical experts. ON Semiconductor does not convey any license under its patent rights nor the rights of others. ON Semiconductor products are not designed, intended, or authorized for use as a critical component in life support systems or any FDA Class 3 medical devices or medical devices with a same or similar classification in a foreign jurisdiction or any devices intended for implantation in the human body. Should Buyer purchase or use ON Semiconductor products for any such unintended or unauthorized application, Buyer shall indemnify and hold ON Semiconductor and its officers, employees, subsidiaries, affiliates, and distributors harmless against all claims, costs, damages, and expenses, and reasonable attorney fees arising out of, directly or indirectly, any claim of personal injury or death associated with such unintended or unauthorized use, even if such claim alleges that ON Semiconductor was negligent regarding the design or manufacture of the part. ON Semiconductor is an Equal Opportunity/Affirmative Action Employer. This literature is subject to all applicable copyright laws and is not for resale in any manner.

PUBLICATION ORDERING INFORMATION

LITERATURE FULFILLMENT:
Literature Distribution Center for ON Semiconductor
19521 E. 32nd Pkwy, Aurora, Colorado 80011 USA
Phone: 303−675−2175 or 800−344−3860 Toll Free USA/Canada
Fax: 303−675−2176 or 800−344−3867 Toll Free USA/Canada
Email: orderlit@onsemi.com

N. American Technical Support: 800−282−9855 Toll Free USA/Canada
Europe, Middle East and Africa Technical Support:
Phone: 421 33 790 2910
Japan Customer Focus Center
Phone: 81−3−5817−1050

ON Semiconductor Website: **www.onsemi.com**

Order Literature: http://www.onsemi.com/orderlit

For additional information, please contact your local Sales Representative

Mouser Electronics

Authorized Distributor

Click to View Pricing, Inventory, Delivery & Lifecycle Information:

ON Semiconductor:

L272M L272AM